OS/390

TSO/E
Command Reference

SC28-1969-03

OS/390

TSO/E
Command Reference

SC28-1969-03

Note

Before using this information and the product it supports, be sure to read the general information under Appendix A, “Notices” on page A-1.

Fourth Edition, September 1999

This edition applies to Version 2 Release 8 of OS/390 (5647-A01) and to all subsequent releases and modifications until otherwise indicated in new editions.

This is a maintenance revision of SC28-1969-02.

Order publications through your IBM representative or the IBM branch office serving your locality. Publications are not stocked at the address below.

IBM welcomes your comments. A form for readers' comments may be provided at the back of this publication, or you may address your comments to the following address:

IBM Corporation
Department 55JA, Mail Station P384
522 South Road
Poughkeepsie, NY 12601-5400
United States of America

FAX (United States and Canada): 1+914+432-9405
FAX (Other countries): Your International Access Code+1+914+432-9405

IBMLink (United States customers only): IBMUSM10(MHVRCFS)
IBM Mail Exchange: USIB6TC9 at IBMMAIL
Internet e-mail: mhvrcfs@us.ibm.com
World Wide Web: http://www.ibm.com/s390/os390/

If you would like a reply, be sure to include your name, address, telephone number, or FAX number.

Make sure to include the following in your comment or note:

- Title and order number of this book
- Page number or topic related to your comment

When you send information to IBM, you grant IBM a nonexclusive right to use or distribute the information in any way it believes appropriate without incurring any obligation to you.

© Copyright International Business Machines Corporation 1988, 1999. All rights reserved.
US Government Users Restricted Rights – Use, duplication or disclosure restricted by GSA ADP Schedule Contract with IBM Corp.

Contents

About This Book . . . ix
Who Should Use This Book . . . ix
How This Book Is Organized . . . ix
Where to Find More Information . . . ix

Summary of Changes . . . xi
Changes to this Book for OS/390 Version 2 Release 4 . . . xi

Chapter 1. TSO/E Commands and Subcommands . . . 1-1
Using a TSO/E Command . . . 1-11
How to Read the TSO/E Command Syntax . . . 1-12
Using the HELP Command . . . 1-15
Using Commands for VSAM and Non-VSAM Data Sets . . . 1-16
TSO/E Commands and Subcommands . . . 1-17
Summary of TSO/E Commands . . . 1-17
ALLOCATE Command . . . 1-19
ALTLIB Command . . . 1-59
ATTRIB Command . . . 1-67
CALL Command . . . 1-75
CANCEL Command . . . 1-79
DELETE Command . . . 1-81
EDIT Command . . . 1-85
EDIT Subcommands (Overview) . . . 1-93
EDIT—ALLOCATE Subcommand . . . 1-94
EDIT—ATTRIB Subcommand . . . 1-94
EDIT—BOTTOM Subcommand . . . 1-94
EDIT—CHANGE Subcommand . . . 1-94
EDIT—CKPOINT Subcommand . . . 1-99
EDIT—COPY Subcommand . . . 1-101
EDIT—DELETE Subcommand . . . 1-108
EDIT—DOWN Subcommand . . . 1-110
EDIT—END Subcommand . . . 1-111
EDIT—EXEC Subcommand . . . 1-111
EDIT—FIND Subcommand . . . 1-111
EDIT—FREE Subcommand . . . 1-113
EDIT—HELP Subcommand . . . 1-113
EDIT—INPUT Subcommand . . . 1-113
EDIT—INSERT Subcommand . . . 1-115
EDIT—Insert/Replace/Delete Function . . . 1-117
EDIT—LIST Subcommand . . . 1-118
EDIT—MOVE Subcommand . . . 1-120
EDIT—PROFILE Subcommand . . . 1-126
EDIT—RENUM Subcommand . . . 1-126
EDIT—RUN Subcommand . . . 1-128
EDIT—SAVE Subcommand . . . 1-131
EDIT—SCAN Subcommand . . . 1-133
EDIT—SEND Subcommand . . . 1-134
EDIT—SUBMIT Subcommand . . . 1-134
EDIT—TABSET Subcommand . . . 1-137
EDIT—TOP Subcommand . . . 1-139

© Copyright IBM Corp. 1988, 1999

EDIT—UNNUM Subcommand 1-140
EDIT—UP Subcommand 1-140
EDIT—VERIFY Subcommand 1-141
END Command 1-142
EXEC Command 1-142
EXECUTIL Command 1-155
FREE Command 1-162
HELP Command 1-167
LINK Command 1-172
LISTALC Command 1-183
LISTBC Command 1-187
LISTCAT Command 1-189
LISTDS Command 1-193
LOADGO Command 1-196
LOGOFF Command 1-203
LOGON Command 1-204
MVSSERV Command 1-209
OUTDES Command 1-210
OUTPUT Command 1-225
OUTPUT Subcommands (Overview) 1-231
OUTPUT—CONTINUE Subcommand 1-231
OUTPUT—END Subcommand 1-232
OUTPUT—HELP Subcommand 1-232
OUTPUT—SAVE Subcommand 1-232
PRINTDS Command 1-233
PROFILE Command 1-248
PROTECT Command 1-256
RECEIVE Command 1-260
RENAME Command 1-271
RUN Command 1-272
SEND Command 1-276
SMCOPY Command 1-281
SMFIND Command 1-284
SMPUT Command 1-286
STATUS Command 1-287
SUBMIT Command 1-288
TERMINAL Command 1-293
TEST Command 1-297
TEST Subcommands (Overview) 1-303
TEST—ALLOCATE Command 1-305
TEST—AND Subcommand 1-305
Assignment of Values Function of TEST 1-308
TEST—AT Subcommand 1-312
TEST—ATTRIB Command 1-316
TEST—CALL Subcommand 1-317
TEST—CANCEL Command 1-319
TEST—COPY Subcommand 1-319
TEST—DELETE Subcommand 1-322
TEST—DROP Subcommand 1-323
TEST—END Subcommand 1-324
TEST—EQUATE Subcommand 1-324
TEST—EXEC Command 1-326
TEST—FREEMAIN Subcommand 1-327
TEST—GETMAIN Subcommand 1-328

TEST—GO Subcommand 1-329
TEST—HELP Command 1-331
TEST—LINK Command 1-331
TEST—LIST Subcommand 1-331
TEST—LISTALC Command 1-337
TEST—LISTBC Command 1-338
TEST—LISTCAT Command 1-338
TEST—LISTDCB Subcommand 1-338
TEST—LISTDEB Subcommand 1-339
TEST—LISTDS Command 1-341
TEST—LISTMAP Subcommand 1-341
TEST—LISTPSW Subcommand 1-342
TEST—LISTTCB Subcommand 1-344
TEST—LISTVP Subcommand 1-346
TEST—LISTVSR Subcommand 1-346
TEST—LOAD Subcommand 1-347
TEST—OFF Subcommand 1-349
TEST—OR Subcommand 1-350
TEST—PROFILE Command 1-353
TEST—PROTECT Command 1-353
TEST—QUALIFY Subcommand 1-353
TEST—RENAME Command 1-356
TEST—RUN Subcommand 1-356
TEST—SEND Command 1-357
TEST—SETVSR Subcommand 1-357
TEST—STATUS Command 1-358
TEST—SUBMIT Command 1-358
TEST—TERMINAL Command 1-359
TEST—UNALLOC Command 1-359
TEST—WHERE Subcommand 1-359
TIME Command 1-361
TRANSMIT Command 1-362
TSOEXEC Command 1-377
TSOLIB Command 1-379
VLFNOTE Command 1-388
WHEN Command 1-391

Chapter 2. Session Manager Commands 2-1
Entering Session Manager Commands 2-3
Command Format 2-3
Session Manager Command Syntax 2-4
Defaults 2-4
Abbreviations 2-4
Session Manager Command Summary 2-5
CHANGE.CURSOR Command 2-7
CHANGE.FUNCTION Command 2-8
CHANGE.MODE Command 2-11
CHANGE.PFK Command 2-12
CHANGE.STREAM Command 2-13
CHANGE.TERMINAL Command 2-14
CHANGE.WINDOW Command 2-16
DEFINE.WINDOW Command 2-18
DELETE.WINDOW Command 2-22
END Command 2-22

FIND Command 2-23
PUT Command 2-25
QUERY Command 2-26
RESET Command 2-30
RESTORE Command 2-30
SAVE Command 2-32
SCROLL Command 2-33
SNAPSHOT Command 2-36
UNLOCK Command 2-37

Appendix A. Notices A-1
Trademarks A-3

Index X-1

Figures

1-1. Commands Preferred for VSAM/Non-VSAM Data Sets 1-17
1-2. Summary of the TSO/E Commands 1-17
1-3. ALLOCATE Command Return Codes 1-51
1-4. Library Search Order 1-59
1-5. ALTLIB Command Return Codes 1-66
1-6. ATTRIB Command Return Codes 1-74
1-7. Allocating and Creating Input Data Sets in the Background 1-76
1-8. CALL Command Return Codes 1-78
1-9. CANCEL Command Return Codes 1-81
1-10. DELETE Command Return Codes 1-84
1-11. EDIT Command: Default Values for LINE or LRECL and BLOCK or BLKSIZE Operands 1-91
1-12. EDIT Command Return Codes 1-91
1-13. Subcommands and Functions of the EDIT Command 1-93
1-14. Default Tab Settings 1-138
1-15. Library Search Order 1-149
1-16. EXEC Command Return Codes 1-151
1-17. EXECUTIL Command Return Codes 1-161
1-18. FREE Command Return Codes 1-166
1-19. Information Available Through the HELP Command 1-169
1-20. HELP Command Return Codes 1-171
1-21. LINK Command Return Codes 1-182
1-22. LISTALC Command Return Codes 1-185
1-23. LISTBC Command Return Codes 1-188
1-24. LISTBC Command Return Codes (Installation-Defined User Log Data Set) 1-188
1-25. LISTCAT Command Return Codes 1-193
1-26. LISTDS Command Return Codes 1-195
1-27. LOADGO Command Return Codes 1-202
1-28. MVSSERV Command Return Codes 1-210
1-29. OUTDES Command Return Codes 1-222
1-30. OUTPUT Command Return Codes 1-230
1-31. Subcommands and Functions of the OUTPUT Command 1-231
1-32. Valid Machine Printer Carriage Control Characters 1-237
1-33. Summary of Default Values for the PRINTDS Command 1-245
1-34. Mutually Exclusive Operands on the PRINTDS Command 1-246
1-35. PRINTDS Command Return Codes 1-247
1-36. System Defaults for Control Characters 1-249
1-37. UPT/PSCB Initialization Table in the Background 1-254
1-38. PROFILE Command Return Codes 1-255
1-39. PROTECT Command Return Codes 1-259
1-40. RECEIVE Command Return Codes 1-266
1-41. Combinations of Source and Target Data Sets 1-267
1-42. RENAME Command Return Codes 1-272
1-43. Source Statement/Program Product Relationship 1-273
1-44. RUN Command Return Codes 1-276
1-45. SEND Command Return Codes 1-279
1-46. SEND Command Return Codes (Installation-Defined User Log Data Set) 1-280
1-47. SMCOPY Command Return Codes 1-284

© Copyright IBM Corp. 1988, 1999

1-48. SMFIND Command Return Codes 1-286
1-49. SMPUT Command Return Codes 1-287
1-50. STATUS Command Return Codes 1-288
1-51. SUBMIT Command Return Codes 1-292
1-52. TERMINAL Command Return Codes 1-297
1-53. TEST Command Return Codes 1-301
1-54. Subcommands and Functions of the TEST Command 1-303
1-55. TRANSMIT Command Return Codes 1-368
1-56. TSOEXEC Command Return Codes 1-378
1-57. TSOLIB Command Return Codes 1-384
1-58. VLFNOTE Command Return Codes 1-391
2-1. Summary of the Session Manager Commands 2-5
2-2. CHANGE.CURSOR Command Return Codes 2-7
2-3. CHANGE.FUNCTION Command Return Codes 2-10
2-4. CHANGE.MODE Command Return Codes 2-11
2-5. CHANGE.PFK Command Return Codes 2-13
2-6. CHANGE.STREAM Command Return Codes 2-14
2-7. CHANGE.TERMINAL Command Return Codes 2-15
2-8. CHANGE.WINDOW Command Return Codes 2-18
2-9. DEFINE.WINDOW Command Return Codes 2-21
2-10. DELETE.WINDOW Command Return Codes 2-22
2-11. FIND Command Return Codes 2-24
2-12. PUT Command Return Codes 2-26
2-13. QUERY Command Return Codes 2-28
2-14. RESET Command Return Codes 2-30
2-15. RESTORE Command Return Codes 2-32
2-16. SAVE Command Return Codes 2-33
2-17. SCROLL Command Return Codes 2-36
2-18. SHAPSHOT Command Return Codes 2-37
2-19. UNLOCK Command Return Codes 2-38

About This Book

This book describes the syntax and function of the commands and subcommands of the TSO/E command language and Session Manager. It provides only reference material and assumes you are experienced in the use of TSO/E and Session Manager.

If you are not familiar with TSO/E, first read *OS/390 TSO/E User's Guide*. If you have little or no knowledge of the use of TSO/E commands, *OS/390 TSO/E User's Guide*, provides the prerequisite information for using this book. The guide explains how to:

- Enter and execute commands
- Name and create specific types of data sets
- Edit, rename, list, copy, free, and delete data sets
- Send and receive data sets
- Print data sets on a JES printer
- Run programs in the foreground or background
- Use TSO/E through ISPF/PDF
- Use Session Manager.

Note: System programming commands are described in *OS/390 TSO/E System Programming Command Reference*.

Who Should Use This Book

Anyone who uses TSO/E and Session Manager commands.

How This Book Is Organized

The major chapters in this book are:

- Chapter 1, TSO/E Commands and Subcommands contains general information needed to use TSO/E commands. It describes the syntax notation in diagrams that accompany each command, positional and keyword operands, delimiters, line continuation, comments, and subcommands.

  This book presents commands in alphabetical order. The subcommands are alphabetized under their commands. For example, all TEST subcommands are alphabetized under the TEST command. Examples are included.

- Chapter 2, Session Manager Commands describes the syntax and function of each Session Manager command. It presents the commands in alphabetical order and includes examples.

Where to Find More Information

Please see *OS/390 Information Roadmap* for an overview of the documentation associated with OS/390.

The latest OS/390 documentation is available on CD ROM which is *IBM Online Library Omnibus Edition OS/390 Collection*, SK2T-6700.

© Copyright IBM Corp. 1988, 1999

The following OS/390 TSO/E documentation has been updated for Version 2 Release 8 as a result of maintenance revisions and is available in printed form and on CD ROM.

- *OS/390 TSO/E Command Reference*
- *OS/390 TSO/E Customization*
- *OS/390 TSO/E General Information*
- *OS/390 TSO/E Messages*
- *OS/390 TSO/E Programming Services*
- *OS/390 TSO/E REXX Reference*

The following OS/390 TSO/E documentation has been updated for Version 2 Release 8 as a result of maintenance revisions and is available **only on CD ROM**. Printed versions of this document for a prior OS/390 release can still be ordered:

- *OS/390 TSO/E Programming Guide*

The following OS/390 TSO/E documentation was updated for Version 2 Release 7 as a result of maintenance revisions and is available in printed form and on CD ROM.

- *OS/390 TSO/E CLISTs*
- *OS/390 TSO/E System Programming Command Reference*

The following OS/390 TSO/E documentation was updated for Version 2 Release 7 as a result of maintenance revisions and is available **only on CD ROM**. Printed versions of these documents for a prior OS/390 release can still be ordered:

- *OS/390 TSO/E REXX User's Guide*
- *OS/390 TSO/E User's Guide*

The following OS/390 TSO/E documentation was updated for Version 2 Release 4 as a result of maintenance revisions and is available **only on CD ROM**. Printed versions of these documents for OS/390 Version 1 Release 2 can still be ordered:

- *OS/390 TSO/E Guide to SRPI*
- *OS/390 TSO/E Primer*
- *OS/390 TSO/E VM/PC User's Guide*

The following OS/390 TSO/E documentation was updated for Version 2 Release 4 and is available **only on CD ROM**:

- *OS/390 TSO/E System Diagnosis: Data Areas*

The following OS/390 TSO/E documentation was not updated for Version 2 Release 4 or for a subsequent maintenance release and is still available in a printed version and on CD ROM:

- *OS/390 TSO/E Administration*

Summary of Changes

Summary of Changes
for SC28-1969-03
OS/390 Version 2 Release 8

This book contains information previously presented in *OS/390 TSO/E Command Reference*, SC28-1969-02, which supports OS/390 TSO/E Version 2 Release 7.

The following summarizes the changes to that information.

New Information

- Information was added as a result of APAR OW35974 which is associated with breakpoint settings and the TEST–AT subcommand. See “TEST—AT Subcommand” on page 1-312.
- A new section was added which describes the results of processing various data set types with TRANSMIT and RECEIVE commands. See “Receiving PDSE Data Sets” on page 1-267.

Changed Information

Changes were made to various ALLOCATE command operand descriptions. See “ALLOCATE Command Operands” on page 1-24

This book includes terminology, maintenance, and editorial changes. Technical changes or additions to the text and illustrations are indicated by a vertical line to the left of the change.

Summary of Changes
for SC28-1969-02
OS/390 Version 2 Release 7

This revision reflects the deletion, addition, or modification of information to support miscellaneous maintenance items and the following APARs:

- OW30933
- OW32350
- OW31126
- OW33746

Changes to this Book for OS/390 Version 2 Release 4

The following commands have been changed:

- “CALL Command Syntax” on page 1-76
- “TEST Command Syntax” on page 1-299
- “TEST—LOAD Subcommand Syntax” on page 1-348

Changes to the PRINTDS command are because of the following APAR:

- APAR OW27107 see on page 1-233

© Copyright IBM Corp. 1988, 1999

This revision also reflects the changes on the following commands caused by miscellaneous maintenance items:

- “ALLOCATE Command” on page 1-19
- “ATTRIB Command” on page 1-67
- “CALL Command” on page 1-75
- “LINK Command” on page 1-172
- “LOADGO Command” on page 1-196
- “OUTDES Command” on page 1-210
- “SEND Command” on page 1-276
- “TEST—SUBMIT Command” on page 1-358
- “TSOLIB Command” on page 1-379

Chapter 1. TSO/E Commands and Subcommands

Using a TSO/E Command . . . 1-11
Positional Operands . . . 1-11
Keyword Operands . . . 1-11
How to Read the TSO/E Command Syntax . . . 1-12
Abbreviating Keyword Operands . . . 1-13
Comments . . . 1-14
Line Continuation . . . 1-14
Delimiters . . . 1-15
Using the HELP Command . . . 1-15
Explanations of Commands . . . 1-16
Syntax Interpretation of HELP Information . . . 1-16
Explanations of Subcommands . . . 1-16
Using Commands for VSAM and Non-VSAM Data Sets . . . 1-16
TSO/E Commands and Subcommands . . . 1-17
Summary of TSO/E Commands . . . 1-17
ALLOCATE Command . . . 1-19
Data Sets with SMS . . . 1-20
Allocating Non-SMS-Managed Data Sets . . . 1-21
Allocating OpenMVS Data Sets . . . 1-21
ALLOCATE Command Syntax . . . 1-21
ALLOCATE Command Operands . . . 1-24
ALLOCATE Command Return Codes . . . 1-51
ALLOCATE Command Examples . . . 1-51
ALTLIB Command . . . 1-59
Search Order for Libraries . . . 1-59
Using ALTLIB with Most Applications . . . 1-60
Using ALTLIB with Concurrent Applications . . . 1-60
Using ALTLIB in ISPF . . . 1-60
Using ALTLIB in the IPCS Dialog . . . 1-61
Stacking Application-Level Library Requests . . . 1-61
ALTLIB Command Syntax . . . 1-62
ALTLIB Command Operands . . . 1-63
ALTLIB Command Return Codes . . . 1-66
ALTLIB Command Examples . . . 1-66
ATTRIB Command . . . 1-67
ATTRIB Command Syntax . . . 1-67
ATTRIB Command Operands . . . 1-69
ATTRIB Command Return Codes . . . 1-74
ATTRIB Command Examples . . . 1-74
CALL Command . . . 1-75
CALL Command in the Background . . . 1-76
CALL Command Syntax . . . 1-76
CALL Command Operands . . . 1-76
CALL Command Return Codes . . . 1-78
CALL Command Examples . . . 1-78
CANCEL Command . . . 1-79
CANCEL Command Syntax . . . 1-80
CANCEL Command Operands . . . 1-80
CANCEL Command Return Codes . . . 1-81
CANCEL Command Examples . . . 1-81

© Copyright IBM Corp. 1988, 1999

DELETE Command 1-81
DELETE Command Syntax 1-82
DELETE Command Operands 1-82
DELETE Command Return Codes 1-84
DELETE Command Example 1-84
EDIT Command 1-85
EDIT Command Syntax 1-85
EDIT Command Operands 1-86
EDIT Command Return Codes 1-91
EDIT Command Examples 1-91
EDIT Subcommands (Overview) 1-93
EDIT—ALLOCATE Subcommand 1-94
EDIT—ATTRIB Subcommand 1-94
EDIT—BOTTOM Subcommand 1-94
EDIT—BOTTOM Subcommand Syntax 1-94
EDIT—CHANGE Subcommand 1-94
EDIT—CHANGE Subcommand Syntax 1-95
EDIT—CHANGE Subcommand Operands 1-95
Quoted-String Notation 1-96
Combinations of Operands 1-97
EDIT—CHANGE Subcommand Examples 1-97
EDIT—CKPOINT Subcommand 1-99
EDIT—CKPOINT Subcommand Syntax 1-99
EDIT—CKPOINT Subcommand Operand 1-100
EDIT—CKPOINT Subcommand Examples 1-100
EDIT—COPY Subcommand 1-101
EDIT—COPY Subcommand Syntax 1-101
EDIT—COPY Subcommand Operands 1-101
EDIT—COPY Subcommand Examples 1-103
EDIT—DELETE Subcommand 1-108
EDIT—DELETE Subcommand Syntax 1-108
EDIT—DELETE Subcommand Operands 1-109
EDIT—DELETE Subcommand Examples 1-109
EDIT—DOWN Subcommand 1-110
EDIT—DOWN Subcommand Syntax 1-110
EDIT—DOWN Subcommand Operand 1-110
EDIT—DOWN Subcommand Examples 1-110
EDIT—END Subcommand 1-111
EDIT—END Subcommand Syntax 1-111
EDIT—END Subcommand Operands 1-111
EDIT—EXEC Subcommand 1-111
EDIT—FIND Subcommand 1-111
EDIT—FIND Subcommand Syntax 1-112
EDIT—FIND Subcommand Operands 1-112
EDIT—FIND Subcommand Examples 1-112
EDIT—FREE Subcommand 1-113
EDIT—HELP Subcommand 1-113
EDIT—INPUT Subcommand 1-113
EDIT—INPUT Subcommand Syntax 1-113
EDIT—INPUT Subcommand Operands 1-113
EDIT—INPUT Subcommand Examples 1-114
EDIT—INSERT Subcommand 1-115
EDIT—INSERT Subcommand Syntax 1-115
EDIT—INSERT Subcommand Operand 1-115

EDIT—INSERT Subcommand Examples 1-115
EDIT—Insert/Replace/Delete Function 1-117
EDIT—Insert/Replace/Delete Function Syntax 1-117
EDIT—Insert/Replace/Delete Function Operands 1-117
How the System Interprets the Operands 1-117
EDIT—Insert/Replace/Delete Function Examples 1-117
EDIT—LIST Subcommand 1-118
EDIT—LIST Subcommand Syntax 1-118
EDIT—LIST Subcommand Operands 1-118
EDIT—LIST Subcommand Examples 1-119
EDIT—MOVE Subcommand 1-120
EDIT—MOVE Subcommand Syntax 1-120
EDIT—MOVE Subcommand Operands 1-120
EDIT—MOVE Subcommand Examples 1-122
EDIT—PROFILE Subcommand 1-126
EDIT—RENUM Subcommand 1-126
EDIT—RENUM Subcommand Syntax 1-127
EDIT—RENUM Subcommand Operands 1-127
EDIT—RENUM Subcommand Examples 1-127
EDIT—RUN Subcommand 1-128
EDIT—RUN Subcommand Syntax 1-128
EDIT—RUN Subcommand Operands 1-129
EDIT—RUN Subcommand Examples 1-130
EDIT—SAVE Subcommand 1-131
EDIT—SAVE Subcommand Syntax 1-131
EDIT—SAVE Subcommand Operands 1-131
EDIT—SAVE Subcommand Examples 1-132
EDIT—SCAN Subcommand 1-133
EDIT—SCAN Subcommand Syntax 1-133
EDIT—SCAN Subcommand Operands 1-133
EDIT—SCAN Subcommand Examples 1-133
EDIT—SEND Subcommand 1-134
EDIT—SUBMIT Subcommand 1-134
EDIT—SUBMIT Subcommand Syntax 1-135
EDIT—SUBMIT Subcommand Operands 1-135
EDIT—SUBMIT Subcommand Examples 1-137
EDIT—TABSET Subcommand 1-137
EDIT—TABSET Subcommand Syntax 1-138
EDIT—TABSET Subcommand Operands 1-139
EDIT—TABSET Subcommand Examples 1-139
EDIT—TOP Subcommand 1-139
EDIT—TOP Subcommand Syntax 1-140
EDIT—TOP Subcommand Examples 1-140
EDIT—UNNUM Subcommand 1-140
EDIT—UNNUM Subcommand Syntax 1-140
EDIT—UNNUM Subcommand Examples 1-140
EDIT—UP Subcommand 1-140
EDIT—UP Subcommand Syntax 1-140
EDIT—UP Subcommand Operands 1-141
EDIT—UP Subcommand Examples 1-141
EDIT—VERIFY Subcommand 1-141
EDIT—VERIFY Subcommand Syntax 1-141
EDIT—VERIFY Subcommand Operands 1-141
EDIT—VERIFY Subcommand Examples 1-142

END Command 1-142
END Command Syntax 1-142
END Command Return Code 1-142
EXEC Command 1-142
Using EXEC as a Subcommand 1-143
EXEC Command Syntax 1-143
EXEC Command Operands 1-144
Using the Explicit Form of the EXEC Command 1-147
Using the (Extended) Implicit Form of the EXEC Command 1-149
Considerations for Passing Quotes 1-150
EXEC Command Return Codes 1-151
EXEC Command Examples 1-151
EXECUTIL Command 1-155
Additional Considerations for Using EXECUTIL 1-156
EXECUTIL Command Syntax 1-156
EXECUTIL Command Operands 1-156
EXECUTIL Command Return Codes 1-161
EXECUTIL Command Examples 1-161
FREE Command 1-162
FREE Command Syntax 1-163
FREE Command Operands 1-163
FREE Command Return Codes 1-166
FREE Command Examples 1-166
HELP Command 1-167
Information available through HELP 1-168
HELP Command Syntax 1-170
HELP Command Operands 1-170
HELP Command Return Codes 1-171
HELP Command Examples 1-171
LINK Command 1-172
LINK Command Syntax 1-172
LINK Command Operands 1-174
LINK Command Return Codes 1-182
LINK Command Examples 1-182
LISTALC Command 1-183
LISTALC Command Syntax 1-183
LISTALC Command Operands 1-184
LISTALC Command Return Codes 1-185
LISTALC Command Examples 1-185
LISTBC Command 1-187
LISTBC Command Syntax 1-188
LISTBC Command Operands 1-188
LISTBC Command Return Codes 1-188
LISTBC Command Examples 1-189
LISTCAT Command 1-189
LISTCAT Command Syntax 1-190
LISTCAT Command Operands 1-190
LISTCAT Command Return Codes 1-193
LISTDS Command 1-193
LISTDS Command Syntax 1-194
LISTDS Command Operands 1-194
LISTDS Command Return Codes 1-195
LISTDS Command Examples 1-195
LOADGO Command 1-196

LOADGO Command Syntax 1-196
LOADGO Command Operands 1-198
LOADGO Command Return Codes 1-202
LOADGO Command Examples 1-202
LOGOFF Command 1-203
LOGOFF Command Syntax 1-203
LOGOFF Command Operands 1-203
LOGOFF Command Examples 1-204
LOGON Command 1-204
Full-Screen LOGON versus Line Mode LOGON 1-204
Full-Screen LOGON Processing 1-205
LOGON Command Syntax 1-206
LOGON Command Operands 1-206
LOGON Command Examples 1-208
MVSSERV Command 1-209
MVSSERV Command Syntax 1-209
MVSSERV Command Operands 1-209
MVSSERV Command Return Codes 1-210
MVSSERV Command Examples 1-210
OUTDES Command 1-210
OUTDES Command Syntax 1-211
OUTDES Command Operands 1-212
Coding Rules 1-222
OUTDES Command Return Codes 1-222
OUTDES Command Examples 1-222
OUTPUT Command 1-225
OUTPUT Command Syntax 1-226
OUTPUT Command Operands 1-226
Output Sequence 1-228
Subcommands for the OUTPUT Command 1-229
Checkpointed Data Set 1-229
OUTPUT Command Return Codes 1-230
OUTPUT Command Examples 1-230
OUTPUT Subcommands (Overview) 1-231
OUTPUT—CONTINUE Subcommand 1-231
OUTPUT—CONTINUE Subcommand Syntax 1-231
OUTPUT—CONTINUE Subcommand Operands 1-231
OUTPUT—CONTINUE Subcommand Examples 1-232
OUTPUT—END Subcommand 1-232
OUTPUT—END Subcommand Syntax 1-232
OUTPUT—HELP Subcommand 1-232
OUTPUT—SAVE Subcommand 1-232
OUTPUT—SAVE Subcommand Syntax 1-233
OUTPUT—SAVE Subcommand Operand 1-233
OUTPUT—SAVE Subcommand Examples 1-233
PRINTDS Command 1-233
Process for the Input Data Set or File 1-234
Output for a Data Set or File 1-234
PRINTDS Command Syntax 1-234
PRINTDS Command Operands 1-236
Default Values for PRINTDS 1-245
Mutually Exclusive Operands on PRINTDS 1-246
PRINTDS Command Return Codes 1-247
PRINTDS Command Examples 1-247

PROFILE Command 1-248
PROFILE Command Syntax 1-249
PROFILE Command Operands 1-250
PROFILE Language Setting Notes 1-253
PROFILE Foreground/Background Processing Differences 1-253
PROFILE Command Return Codes 1-255
PROFILE Command Examples 1-255
PROTECT Command 1-256
PROTECT Command Syntax 1-256
PROTECT Command Operands 1-257
Passwords 1-258
Types of Access 1-258
Password Data Set 1-259
PROTECT Command Return Codes 1-259
PROTECT Command Examples 1-259
RECEIVE Command 1-260
RECEIVE Command Syntax 1-260
RECEIVE Command Operands 1-261
RECEIVE Command Prompt Parameters 1-262
RECEIVE Command Prompt Parameter Syntax 1-262
RECEIVE Command Prompt Parameters 1-263
RECEIVE Command Return Codes 1-266
Receiving Data 1-266
Data Set Organization 1-266
Receiving PDSE Data Sets 1-267
Receiving Protected Data Sets 1-267
Receiving Enciphered Data 1-268
Receiving Data Sets and Messages with Security Labels 1-268
RECEIVE Command Examples 1-268
RENAME Command 1-271
RENAME Command Syntax 1-271
RENAME Command Operands 1-271
RENAME Command Return Codes 1-272
RENAME Command Examples 1-272
RUN Command 1-272
RUN Command Syntax 1-273
RUN Command Operands 1-273
Determining Compiler Type 1-275
RUN Command Return Codes 1-276
RUN Command Examples 1-276
SEND Command 1-276
SEND Command Syntax 1-277
SEND Command Operands 1-278
SEND Command Return Codes 1-279
SEND Command Examples 1-280
SMCOPY Command 1-281
SMCOPY Command Syntax 1-281
SMCOPY Command Operands 1-282
SMCOPY Command Return Codes 1-284
SMCOPY Command Examples 1-284
SMFIND Command 1-284
SMFIND Command Syntax 1-285
SMFIND Command Operands 1-285
SMFIND Command Return Codes 1-286

SMFIND Command Examples 1-286
SMPUT Command 1-286
SMPUT Command Syntax 1-286
SMPUT Command Operands 1-286
SMPUT Command Return Codes 1-287
SMPUT Command Examples 1-287
STATUS Command 1-287
STATUS Command Syntax 1-288
STATUS Command Operand 1-288
STATUS Command Return Codes 1-288
SUBMIT Command 1-288
SUBMIT Command Syntax 1-289
SUBMIT Command Operands 1-289
SUBMIT Command Return Codes 1-292
SUBMIT Command Examples 1-292
TERMINAL Command 1-293
TERMINAL Command Syntax 1-293
TERMINAL Command Operands 1-294
TERMINAL Command Return Codes 1-297
TERMINAL Command Examples 1-297
TEST Command 1-297
TEST Command Syntax 1-299
TEST Command Operands 1-299
TEST Command Return Codes 1-301
TEST Command Examples 1-301
TEST Subcommands (Overview) 1-303
TEST—ALLOCATE Command 1-305
TEST—AND Subcommand 1-305
TEST—AND Subcommand Syntax 1-305
TEST—AND Subcommand Operands 1-306
TEST—AND Subcommand Examples 1-307
Assignment of Values Function of TEST 1-308
Syntax of Values Function of TEST 1-308
Operands of Values Function of TEST 1-308
Examples of Values Function of TEST 1-311
TEST—AT Subcommand 1-312
TEST—AT Subcommand Syntax 1-313
TEST—AT Subcommand Operands 1-313
TEST—AT Subcommand Examples 1-315
TEST—ATTRIB Command 1-316
TEST—CALL Subcommand 1-317
TEST—CALL Subcommand Syntax 1-317
TEST—CALL Subcommand Operands 1-317
TEST—CALL Subcommand Examples 1-318
TEST—CANCEL Command 1-319
TEST—COPY Subcommand 1-319
TEST—COPY Subcommand Syntax 1-319
TEST—COPY Subcommand Operands 1-319
TEST—COPY Subcommand Examples 1-321
TEST—DELETE Subcommand 1-322
TEST—DELETE Subcommand Syntax 1-322
TEST—DELETE Subcommand Operand 1-322
TEST—DELETE Subcommand Examples 1-322
TEST—DROP Subcommand 1-323

TEST—DROP Subcommand Syntax 1-323
TEST—DROP Subcommand Operand 1-323
TEST—DROP Subcommand Examples 1-323
TEST—END Subcommand 1-324
TEST—END Subcommand Syntax 1-324
TEST—EQUATE Subcommand 1-324
TEST—EQUATE Subcommand Syntax 1-324
TEST—EQUATE Subcommand Operands 1-324
TEST—EQUATE Subcommand Examples 1-326
TEST—EXEC Command 1-326
TEST—FREEMAIN Subcommand 1-327
TEST—FREEMAIN Subcommand Syntax 1-327
TEST—FREEMAIN Subcommand Operands 1-327
TEST—FREEMAIN Subcommand Examples 1-327
TEST—GETMAIN Subcommand 1-328
TEST—GETMAIN Subcommand Syntax 1-328
TEST—GETMAIN Subcommand Operands 1-328
TEST—GETMAIN Subcommand Examples 1-329
TEST—GO Subcommand 1-329
TEST—GO Subcommand Syntax 1-330
TEST—GO Subcommand Operands 1-330
TEST—GO Subcommand Examples 1-330
TEST—HELP Command 1-331
TEST—LINK Command 1-331
TEST—LIST Subcommand 1-331
TEST—LIST Subcommand Syntax 1-331
TEST—LIST Subcommand Operands 1-331
TEST—LIST Subcommand Examples 1-335
TEST—LISTALC Command 1-337
TEST—LISTBC Command 1-338
TEST—LISTCAT Command 1-338
TEST—LISTDCB Subcommand 1-338
TEST—LISTDCB Subcommand Syntax 1-338
TEST—LISTDCB Subcommand Operands 1-338
TEST—LISTDCB Subcommand Examples 1-339
TEST—LISTDEB Subcommand 1-339
TEST—LISTDEB Subcommand Syntax 1-340
TEST—LISTDEB Subcommand Operands 1-340
TEST—LISTDEB Subcommand Examples 1-341
TEST—LISTDS Command 1-341
TEST—LISTMAP Subcommand 1-341
TEST—LISTMAP Subcommand Syntax 1-341
TEST—LISTMAP Subcommand Operands 1-342
TEST—LISTMAP Subcommand Examples 1-342
TEST—LISTPSW Subcommand 1-342
TEST—LISTPSW Subcommand Syntax 1-343
TEST—LISTPSW Subcommand Operands 1-343
TEST—LISTPSW Subcommand Examples 1-343
TEST—LISTTCB Subcommand 1-344
TEST—LISTTCB Subcommand Syntax 1-344
TEST—LISTTCB Subcommand Operands 1-344
TEST—LISTTCB Subcommand Examples 1-345
TEST—LISTVP Subcommand 1-346
TEST—LISTVP Subcommand Syntax 1-346

TEST—LISTVP Subcommand Examples 1-346
TEST—LISTVSR Subcommand 1-346
TEST—LISTVSR Subcommand Syntax 1-346
TEST—LISTVSR Subcommand Operands 1-346
TEST—LISTVSR Subcommand Examples 1-347
TEST—LOAD Subcommand 1-347
TEST—LOAD Subcommand Syntax 1-348
TEST—LOAD Subcommand Operands 1-348
TEST—LOAD Subcommand Examples 1-348
TEST—OFF Subcommand 1-349
TEST—OFF Subcommand Syntax 1-349
TEST—OFF Subcommand Operands 1-349
TEST—OFF Subcommand Examples 1-349
TEST—OR Subcommand 1-350
TEST—OR Subcommand Syntax 1-350
TEST—OR Subcommand Operands 1-350
TEST—OR Subcommand Examples 1-352
TEST—PROFILE Command 1-353
TEST—PROTECT Command 1-353
TEST—QUALIFY Subcommand 1-353
TEST—QUALIFY Subcommand Syntax 1-353
TEST—QUALIFY Subcommand Operands 1-354
TEST—QUALIFY Subcommand Examples 1-354
TEST—RENAME Command 1-356
TEST—RUN Subcommand 1-356
TEST—RUN Subcommand Syntax 1-356
TEST—RUN Subcommand Operands 1-356
TEST—RUN Subcommand Examples 1-357
TEST—SEND Command 1-357
TEST—SETVSR Subcommand 1-357
TEST—SETVSR Subcommand Syntax 1-358
TEST—SETVSR Subcommand Operands 1-358
TEST—SETVSR Subcommand Examples 1-358
TEST—STATUS Command 1-358
TEST—SUBMIT Command 1-358
TEST—TERMINAL Command 1-359
TEST—UNALLOC Command 1-359
TEST—WHERE Subcommand 1-359
TEST—WHERE Subcommand Syntax 1-359
TEST—WHERE Subcommand Operands 1-359
TEST—WHERE Subcommand Examples 1-360
TIME Command 1-361
TIME Command Syntax 1-362
TIME Command Return Code 1-362
TRANSMIT Command 1-362
TRANSMIT Command Syntax 1-362
TRANSMIT Command Operands 1-363
TRANSMIT Command Return Codes 1-368
Transmitting Data Sets 1-368
Transmitting Data Sets as Messages 1-368
Transmitting Messages 1-368
Transmitting Enciphered Data 1-369
Transmitting Data Sets and Messages with Security Labels 1-369
Logging Function of TRANSMIT and RECEIVE 1-370

NAMES Data Set Function 1-371
Control Section Tags 1-372
Nicknames Section Tags 1-373
TRANSMIT Command Examples 1-374
TSOEXEC Command 1-377
TSOEXEC Command Syntax 1-378
TSOEXEC Command Operand 1-378
TSOEXEC Command Return Codes 1-378
TSOEXEC Command Examples 1-378
TSOLIB Command 1-379
Search Order for Load Modules 1-379
Further Considerations 1-380
Command Usage 1-381
Stacking Load Module Library Requests 1-381
TSOLIB Command Syntax 1-381
TSOLIB Command Operands 1-382
TSOLIB Command Return Codes 1-384
TSOLIB Command Examples 1-385
VLFNOTE Command 1-388
Changing Data Associated with a Partitioned Data Set 1-389
VLFNOTE Command Syntax (Partitioned Data Set) 1-389
VLFNOTE Command Operands (Partitioned Data Set) 1-389
VLFNOTE Command Examples (Partitioned Data Set) 1-390
Changing Non-PDS Data 1-390
VLFNOTE Command Syntax (Non-PDS) 1-390
VLFNOTE Command Operands (Non-PDS) 1-390
VLFNOTE Command Examples (Non-PDS) 1-391
VLFNOTE Command Return Codes 1-391
WHEN Command 1-391
WHEN Command Syntax 1-391
WHEN Command Operands 1-391
WHEN Command Return Code 1-392
WHEN Command Examples 1-392

This section describes the functions and syntax of TSO/E commands and their subcommands. It includes:

- The general format and syntax rules for the commands
- A description of each command. The commands are described in alphabetical order.
- Examples of how to use commands and subcommands.

The commands are presented in alphabetical order. Subcommands are also presented in alphabetical order following the command to which they apply.

Introductory information about how to use TSO/E is described in *OS/390 TSO/E User's Guide*.

Using a TSO/E Command

A command consists of a command name usually followed by one or more operands. Operands provide the specific information required to perform the requested operation. For example, operands for the RENAME command identify the data set you want to rename:

RENAME	OLDNAME	NEWNAME
command name	operand_1 (old data set name)	operand_2 (new data set name)

You can use two types of operands with the commands: *positional* and *keyword*.

Positional Operands

Positional operands follow the command name in a certain order. In the command descriptions within this book, the positional operands are shown in lowercase characters. For example,

```
EDIT reports.data
```

where *reports.data* is the *data_set_name* positional operand with the EDIT command.

When you enter a positional operand that is a list of several names or values, you must enclose the list within parentheses. For example,

```
LISTDS (PARTS.DATA TEST.DATA)
```

Keyword Operands

Keyword operands (keywords) are specific names or symbols that have a particular meaning to the system. You can include keywords in any order following the positional operands. In the command descriptions within this book, keywords are shown in uppercase characters.

You can specify values with some keywords. Enclose the value with parentheses following the keyword. For example, a typical keyword operand with a value is:

```
LINESIZE(integer)
```

Continuing this example, you would select the number of characters that you want to appear in a line and substitute that number for *integer* when you enter the operand:

```
LINESIZE(80)
```

However, if you enter conflicting, mutually exclusive keywords, the last keyword you enter overrides the previous ones.

“How to Read the TSO/E Command Syntax” on page 1-12 describes the syntax notation for the TSO/E commands and subcommands.

How to Read the TSO/E Command Syntax

Throughout this book, syntax is described using the structure defined below.

Read the syntax diagrams from left to right, from top to bottom, following the path of the line.

Double arrows indicate the beginning and ending of a statement.

```
►►──STATEMENT──────────────────────────────────────────────────────────────►◄
```

If a statement syntax requires more than one line to be shown, single arrows indicate their continuation.

```
►►──STATEMENT──────────────────────────────────────────────────────────────►
►──────────────────────────────────────────────────────────────────────────►◄
```

Required items appear on the horizontal line (the main path).

```
►►──STATEMENT──required_item──────────────────────────────────────────────►◄
```

Optional items appear below the main path.

```
►►──STATEMENT──┬──────────────┬──────────────────────────────────────────►◄
               └─optional_item─┘
```

If you can choose from two or more items, they are stacked vertically.

- If you *must* choose one of the items, an item of the stack appears on the main path.

```
►►──STATEMENT──┬─required_choice_1─┬──────────────────────────────────►◄
               └─required_choice_2─┘
```

- If choosing one of the items is optional, the entire stack appears below the main path.

```
►►──STATEMENT──┬──────────────────┬──────────────────────────────────────►◄
               ├─optional_choice_1─┤
               └─optional_choice_2─┘
```

An arrow returning to the left above the main line indicates an item that can be repeated.

```
►►──STATEMENT──┬──┬──────────────┬──┬──────────────────────────────────►◄
               │  ▼─repeatable_item─┤  │
               └────────────────────┘
```

A repeat arrow above a stack indicates that you can make more than one choice from the stacked items, or repeat a single choice.

```
►►──STATEMENT──┬──┬─repeatable_item_1─┬──┬──────────────────────────────►◄
               │  ▼─repeatable_item_2─┤  │
               └──────────────────────┘
```

Default values appear above the main path. For example, if you choose neither *choice_2* nor *choice_3*, *choice_1* is assumed. (Defaults *can* be coded for clarity reasons.)

```
                  ┌─choice_1─┐
►►──STATEMENT─────┤          ├──────────────────────────────────────────►◄
                  ├─choice_2─┤
                  └─choice_3─┘
```

If a syntax diagram becomes too large or too complex to be printed or shown, fragments of it are shown below the main diagram as details.

```
►►──STATEMENT──────required_variable──┬──────────────────────────┬──────►
                                      └─'optional_parameter'─────┘
►──┤ FRAGMENT ├──────────────────────────────────────────────────────────►◄
```

FRAGMENT:

```
├──OPERAND──┬──────────────────────┬──┬──────────────────────┬──────────►
            ├─optional_choice_1a───┤  ├─optional_choice_2a───┤
            └─optional_choice_1b───┘  └─optional_choice_2b───┘

►──┬──────────────────────┬──┬──────────────────────┬──────────────────┤
   ├─optional_choice_3a───┤  ├─optional_choice_4a───┤
   └─optional_choice_3b───┘  └─optional_choice_4b───┘
```

The previous syntax diagram is equivalent to the following diagram:

```
►►──STATEMENT──────required_variable──┬──────────────────────────┬──OPERAND──►
                                      └─'optional_parameter'─────┘

►──┬──────────────────────┬──┬──────────────────────┬──────────────────────►
   ├─optional_choice_1a───┤  ├─optional_choice_2a───┤
   └─optional_choice_1b───┘  └─optional_choice_2b───┘

►──┬──────────────────────┬──┬──────────────────────┬──────────────────►◄
   ├─optional_choice_3a───┤  ├─optional_choice_4a───┤
   └─optional_choice_3b───┘  └─optional_choice_4b───┘
```

Keywords appear in uppercase (for example, `PARM1`). They must be spelled exactly as shown. Variables appear in all lowercase letters (for example, *parmx*). They represent user-supplied names or values.

If punctuation marks, parentheses, arithmetic operators, or such symbols are shown, they must be entered as part of the syntax.

Abbreviating Keyword Operands

You can enter keywords spelled exactly as they are shown or you can use an acceptable abbreviation. You can abbreviate any keyword by entering only the significant characters; that is, you must type as much of the keyword as is necessary to distinguish it from the other keywords of the command or subcommand. For example, the LISTBC command has four keywords:

MAIL
NOMAIL
NOTICES
NONOTICES

The abbreviations are:

M	for MAIL (also MA and MAI)
NOM	for NOMAIL (also NOMA and NOMAI)
NOT	for NOTICES (also NOTI, NOTIC, and NOTICE)
NON	for NONOTICES (also NONO, NONOT, NONOTI, NONOTIC, and NONOTICE)

Also, the DELETE and LISTCAT commands allow unique abbreviations for some of their keywords. The abbreviations are shown with the syntax and operand descriptions of DELETE and LISTCAT.

Comments

You can include comments in a TSO/E command anywhere a blank might appear. To include a comment, start with delimiter `/*`. If you want to continue the command after the comment, close the comment with delimiter `*/`.

```
listd (data_set_list) /* my data sets
```

or

```
listd /* my data sets */ (data_set_list)
```

You do not need to end a comment with `*/` if the comment is the last thing on the line. Ending a comment with `*/` is a convention, not a requirement here. Comments are most useful in CLISTs.

Line Continuation

CAUTION:
A plus sign causes leading delimiters to be removed from the continuation line.

When it is necessary to continue to the next line, use a plus or minus sign as the last character of the line you wish to continue.

```
list (data_set_list) /* this is a list of my -
                        active data sets */
```

or

```
alloc dataset(out.data) file(output) new +
space(10,2) tracks release
```

Note: If you are using REXX commands and want to continue to the next line, the plus or minus sign does not work. You must use the comma.

The following example shows how to use the comma with the REXX command (PUSH), to continue to the next line. The comma must be outside the quotation marks.

```
/* REXX * test ACCOUNT */
x = Outtrap("var.")
PUSH 'END'
PUSH 'ADD  (NEWUSER * * TPROC)',
     'UNIT(SYSTS)',
     'SIZE(4000)'
Address TSO "ACCOUNT"
x = Outtrap("OFF")
Say 'RC from account was:' rc
Do i=1 to var.0                /* loop through all messages */
  Say var.i                    /* display each message      */
End
```

To continue a line that contains a comment, use a continuation character *after* the comment:

```
allocate dataset(my.text) /* data set name */ +
         new volume(tsomar2)
```

Delimiters

When you type a command, you must separate the command name from the first operand by one or more blanks. You must separate operands by one or more blanks or a comma. Do not use a semicolon as a delimiter because any character you enter after a semicolon is ignored. For example, if you use a blank or a comma as a delimiter, you can type the LISTBC command as follows:

```
LISTBC NOMAIL NONOTICES
LISTBC NOMAIL,NONOTICES
LISTBC NOMAIL   NONOTICES
```

When creating (or updating) a CLIST, do not use any of the following as a delimiter:

- The special characters @, $, or #
- A single quote
- A number
- A blank
- A tab
- A comma
- A semicolon
- A parenthesis
- An asterisk

Note: When entering commands under ISPF or Program Control Facility (PCF), do not use the ISPF or PCF command delimiter character that your installation has set for these facilities. The default delimiter character for each ISPF and PCF command is the semicolon (;), but your installation can specify a different delimiter character.

Using the HELP Command

Use the HELP command to receive all the information on the system on how to use any TSO/E command. The requested information is displayed on your terminal.

Explanations of Commands

To receive a list of all the TSO/E commands in the SYS1.HELP data set along with a description of each, enter the HELP command as follows:

```
help
```

You can place information about installation-written commands in the SYS1.HELP data set. You can also get all the information available about a specific command in SYS1.HELP by entering the specific command name as an operand on the HELP command, as follows:

```
help ALLOCATE
```

where ALLOCATE is the command name.

Syntax Interpretation of HELP Information

The syntax notation for the HELP information is different from the syntax notation presented in this book because it is restricted to characters that are displayed on your terminal. You can get the syntax interpretation by entering the HELP command as follows:

```
help help
```

Explanations of Subcommands

When HELP exists as a subcommand, you can use it to obtain a list of subcommands or additional information about a particular subcommand. The syntax of HELP as a subcommand is the same as the HELP command.

Using Commands for VSAM and Non-VSAM Data Sets

Access Method Services is a multi-function service program that primarily establishes and maintains Virtual Storage Access Method (VSAM) data sets.

Figure 1-1 shows recommended commands, by function, for VSAM and non-VSAM data sets. Numbers indicate order of preference. Program product commands are identified with an asterisk (*). For commands not covered in this book, see *DFSMS/MVS Access Method Services for ICF*.

Figure 1-1. Commands Preferred for VSAM/Non-VSAM Data Sets

Function	Non-VSAM	VSAM
Build lists of attributes	ATTRIB	(None)
Allocate new DASD space	ALLOCATE	DEFINE or ALLOCATE
Connect data set to terminal	ALLOCATE	ALLOCATE
List names of allocated (connected) data sets	LISTALC	LISTALC
Modify passwords	PROTECT	DEFINE, ALTER
List attributes of one or more objects	1. LISTDS, 2. LISTCAT	1. LISTCAT, 2. LISTDS
List names of cataloged data sets (limit by type)	LISTCAT	LISTCAT
List names of cataloged data sets (limit by naming convention)	LISTDS	LISTDS
Catalog data sets	1. DEFINE, 2. ALLOCATE	DEFINE
List contents of data set	EDIT, LIST*	PRINT
Rename data set	RENAME	ALTER
Delete data set	DELETE	DELETE
Copy data set	COPY*	REPRO

TSO/E Commands and Subcommands

TSO/E commands which require a data set name (for example, Edit, DELete, XMIT etc.) first search the current allocations to see if the data set is already allocated to the TSO/E session. If the data set name is already allocated, it will be used by the command. If the data set name is not allocated, it will be allocated based on the standard catalog search order. Therefore, if a data set is desired that is not cataloged, you must use the ALLOCATE command to allocate it to the TSO/E session (see “ALLOCATE Command” on page 1-19). This data set will then be used by all subsequent commands that use this data set name as one of the parameters. Conversely, if an uncataloged data set is allocated to the TSO/E session with the same name as a cataloged data set, and the cataloged data set is desired, the uncataloged data set must first be FREEd so that the standard catalog search order will be used to find the cataloged data set.

Summary of TSO/E Commands

Figure 1-2 (Page 1 of 3). Summary of the TSO/E Commands

Command	Function
ALLOCATE	Dynamically allocates data sets.
ALTLIB	Defines alternative application-level libraries of REXX EXECs or CLISTs.
ATTRIB	Builds a list of attributes for non-VSAM data sets.
CALL	Loads and executes a program.
CANCEL	Ends the processing of batch jobs submitted at your terminal.

Figure 1-2 (Page 2 of 3). Summary of the TSO/E Commands

Command	Function
DELETE	Deletes data set entries or members of a partitioned data set.
EDIT	Creates, modifies, stores, submits, retrieves, and deletes data sets. See command definitions for definitions of EDIT subcommands.
END	Ends a CLIST.
EXEC	Executes a CLIST or REXX exec.
EXECUTIL	Changes various characteristics that control how REXX execs run in the TSO/E address space only.
FREE	Releases previously allocated data sets, changes the output of a SYSOUT data set, deletes attribute lists, or changes data set disposition.
HELP	Gets information about the function, syntax, and operands of commands and subcommands and information about certain messages.
LINK	Invokes the linkage editor service program.
LISTALC	Lists data sets that are currently allocated to the TSO/E session.
LISTBC	Displays messages of general interest.
LISTCAT	Lists entries from a catalog by name or entry type.
LISTDS	Displays attributes of data sets.
LOADGO	Loads a compiled or assembled program into real storage and begins execution.
LOGOFF	Ends your terminal session.
LOGON	Starts your terminal session.
MVSSERV	Starts a TSO/E Enhanced Connectivity Facility session between an IBM Personal Computer and a host computer running TSO/E MVS. After you have invoked MVSSERV and you are in a VM/PC session, you can also use the DSNMAP and TSO/E commands.
OUTDES	Creates or reuses dynamic output descriptors.
OUTPUT	Directs output from a job to your terminal or to a specific data set; deletes the output, changes output class, routes output to a remote workstation, or releases the output for a job for printing by the subsystem.
PRINTDS	Formats and prints data sets on any printer defined to JES.
PROFILE	Changes or lists your user profile.
PROTECT	Prevents unauthorized access to your non-VSAM data sets.
RECEIVE	Retrieves transmitted files and restore them to their original format.
RENAME	Changes the name of a non-VSAM cataloged data set, changes the member name of a partitioned data set, or creates an alias for a partitioned data set member.
RUN	Compiles, loads, and executes the source statements in a data set.
SEND	Sends a message to another terminal user or to the system operator.
SMCOPY	Copies all or part of a stream or data set to another stream or data set.
SMFIND	Locates a string of characters in a stream.
SMPUT	Places a string of characters in a stream.
STATUS	Displays the status of a job.
SUBMIT	Submits one or more batch jobs for processing.

Figure 1-2 (Page 3 of 3). Summary of the TSO/E Commands

Command	Function
TERMINAL	Lists or changes operating characteristics of your terminal.
TEST	Tests a program or command processor written in Assembler language.
TIME	Displays CPU and session time, total service units used, local time of day and date.
TRANSMIT	Sends information, such as a message or a copy of information in a data set, to another user in the network.
TSOEXEC	Invokes an authorized command from an unauthorized environment.
TSOLIB	Dynamically links to different versions of load module libraries from within a user's TSO/E session.
VLFNOTE	Notifies VLF that a change has been made to a partitioned data set or a non-partitioned data set.
WHEN	Tests return codes from programs invoked from an immediately preceding CALL or LOADGO command, and to take prescribed action if the return code meets a specified condition.

Note: Except for the DELETE and LISTCAT commands, TSO/E does not support generation data group (GDG) data sets.

ALLOCATE Command

Use the ALLOCATE command or the ALLOCATE subcommand of EDIT (the subcommand's function and syntax are identical to the ALLOCATE command) to allocate dynamically the VSAM and non-VSAM data sets, and hierarchical file system (HFS) files required by a program that you intend to execute. Each HFS data set contains zero or more HFS files.

Each HFS data set has a 44-byte data set name and must be capitalized and cataloged. An HFS file has a mixed-case name of up to 250 characters.

There is no documented API for an HFS data set. Users can access HFS files with BSAM, QSAM, VSAM and UNIX calls.

You can specify data set attributes for non-VSAM data sets that you intend to allocate dynamically in several ways:

- Use the LIKE operand to obtain the attributes from an existing model data set (a data set that must be cataloged) whose data set attributes you want to use. You can override model data set attributes by explicitly specifying the desired attributes on the ALLOCATE command.
- Identify a data set and describe its attributes explicitly on the ALLOCATE command.
- Use the ATTRIB command to build a list of attributes. During the remainder of your terminal session, you can have the system refer to this list for data set attributes by specifying the USING operand when you enter the ALLOCATE command. The ALLOCATE command converts the attributes into the data control block (DCB) operands for data sets being allocated. If you code DCB attributes in an attribute-list and you refer to the attribute-list using the USING

operand on the ALLOCATE command, any DCB attribute you code on the ALLOCATE command is ignored.

- With the Storage Management Subsystem (SMS) installed and active, use the DATACLAS operand. Your storage administrator might provide default data set attributes through the automatic class selection (ACS) routine. Using DATACLAS to define the data class for the data set makes specifying all the attributes unnecessary.

In this book, “with SMS” indicates that SMS is installed and is active. “Without SMS” indicates that SMS is not installed. Requesting space, in terms of a quantity of logical records, is device-independent and is particularly useful in conjunction with a system-determined BLKSIZE. This space can be obtained by omitting the BLKSIZE operand and coding LRECL, RECFM, and DSORG, or acquiring these from SMS DATACLAS.

Data Sets with SMS

If your installation has the Storage Management Subsystem (SMS), and it is active, SMS allows you to more easily define new data sets by managing storage requirements for you. The storage administrator at your installation determines the data sets that are to be managed by SMS. The administrator writes the automatic class selection (ACS) routine that SMS uses to assign definitions or classes to a new data set. See SMS Classes.

SMS can manage the following types of data sets:

- Physical sequential data sets
- Partitioned data sets
- VSAM data sets
- Generation data group (GDG) data sets
- Temporary data sets
- Virtual input output (VIO) data sets

SMS does *not* manage the following types of data sets:

- Tape data sets
- ISAM data sets
- Sysout data sets
- Subsystem data sets
- TSO/E data sets coming from or going to a terminal
- In-stream data sets

SMS Classes

With SMS, a new data set can have one or more of the following three classes:

- *Data class* contains the data set attributes related to the allocation of the data set, such as LRECL, RECFM, SPACE, and TRACKS.
- *Storage class* contains performance and availability attributes related to the storage occupied by the data set. A data set that has a storage class assigned to it is defined as an “SMS-managed” data set.
- *Management class* contains the data set attributes related to the migration and backup of the data set, such as performed by DFSMShsm, and the expiration date of the data set. A management class can be assigned only to a data set that also has a storage class assigned.

All of the above classes are defined by the storage administrator at your installation. The administrator writes the automatic class selection (ACS) routines that SMS uses to assign the classes to a new data set.

The DATACLAS, MGMTCLAS, and STORCLAS operands of the ALLOCATE command simplify the process of allocating a new data set. For example, assigning the DATACLAS operand to a data set keeps you from having to specify all the attributes of the data set on the ALLOCATE command. If you assign a storage class (STORCLAS) to a data set, you do not have to specify a volume serial number (VOLUME) or a unit type (UNIT).

If you do not specify DATACLAS, MGMTCLAS, and STORCLAS or the overriding attributes (DSORG, RECFM, LRECL, and so forth), the system assumes the defaults that the storage administrator defined through the ACS routines. The ACS routines can either change or retain the specified data set attributes. You can specify both a class attribute and an overriding attribute, such as DATACLAS and SPACE, respectively. The system uses SPACE as the storage value and the allocation attributes associated with the name specified on DATACLAS.

Note: You must explicitly allocate a new SMS-managed data set with a disposition of NEW.

Allocating Non-SMS-Managed Data Sets

With SMS, you can specify DATACLAS to allocate non-SMS-managed data sets. You cannot, however, use the STORCLAS and MGMTCLAS operands. STORCLAS and MGMTCLAS determine whether a data set is managed by SMS.

Allocating OpenMVS Data Sets

For OpenMVS, you can specify the following operands: PATH, PATHDISP, PATHMODE, PATHOPTS, DSNTYPE(HFS), and DSNTYPE(PIPE). For more information, see *OS/390 TSO/E User's Guide*.

ALLOCATE Command Syntax

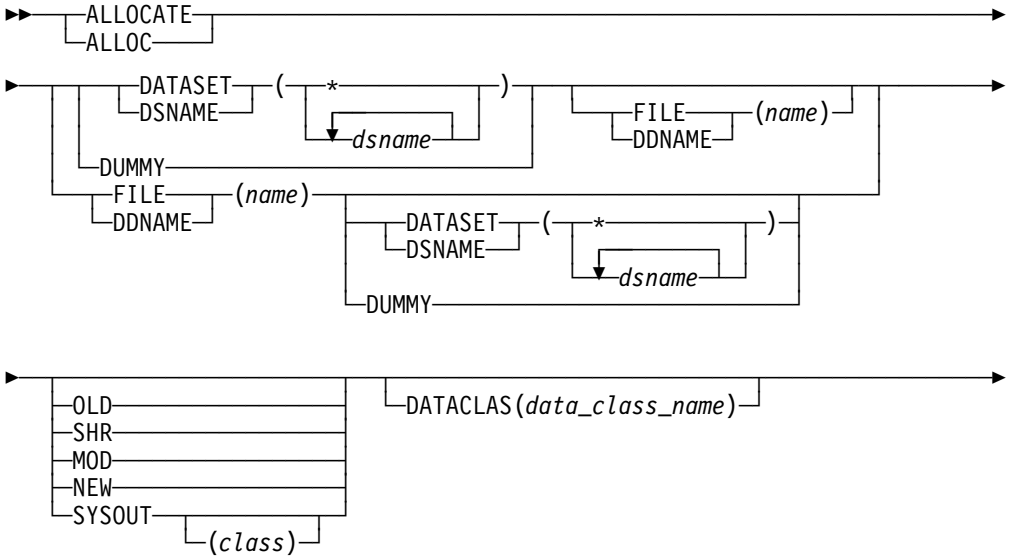

```
►──┬──────────────────────────────────────────────────────────────────────────────────►
   └─MGMTCLAS(management_class_name)─┘

►──┬──────────────────────────────────┬──────────────────────────────────────────────►
   └─STORCLAS(storage_class_name)─┘   └─VOLUME(serial_list)─┘

►──┬──────────────────────────────────────────────────────────────────────────────────►
   └─SPACE(quantity──────────────────)──┬─BLOCK(value)──────┬──┬──────────────────┬──┘
                   └─,increment─┘       ├─AVBLOCK(value)──┤  │                  │
                                        ├─TRACKS──────────┤  │                  │
                                        └─CYLINDERS───────┘  │                  │

►──┬──────────────────────────────────┬──────────────────────┬──────────────────────►
   └─AVGREC(──┬─U─┬──)─┘   └─BLKSIZE(value)─┘   └─DIR(integer)─┘
              ├─K─┤
              └─M─┘

►──┬──────────────────────────────────┬──────────────────────────────────┬──────────►
   └─ALTFILE(name)─┘   └─DEST(──┬─destination──────────────)─┘   └─REUSE─┘
                                └─destination.user_id─┘

   ┌─NOHOLD─┐
►──┤        ├──┬──────────────────────┬──────────────────────────────────────────────►
   └─HOLD───┘  └─UNIT(type)─┘   ┌─UCOUNT(count)─┐   └─LABEL(type)─┘
                                └─PARALLEL──────┘

►──┬──────────────────────────────────┬──────────────────────────────────────────────►
   └─ACCODE(access_code)─┘   └─POSITION(sequence_no.)─┘

►──┬──────────────────────────────────┬──────────────────────────────────────────────►
   └─MAXVOL(count)─┘   └─PRIVATE─┘   └─VSEQ(vol_seq_no.)─┘

►──┬──────────────────────────────────┬──────────────────────────────────────────────►
   ├─LIKE(model_dsname)──────────────┤   └─REFDD(file_name)─┘
   └─USING(attr_list_name)───────────┘

►──┬──────────────────────────────────┬──────────────────────────────────────────────►
   └─SECMODEL(profile_name──────────)─┘   └─RELEASE─┘
                          └─,GENERIC─┘

►──┬──────────────────────────────────┬──────────────────────────────────────────────►
   └─ROUND─┘   ├─KEEP───────────────┤   ├─BUFL(buffer_length)──────────┤
               ├─DELETE─────────────┤   └─BUFNO(number_of_buffers)─┘
               ├─CATALOG────────────┤
               └─UNCATALOG──────────┘

►──┬──────────────────────────────────┬──────────────────────────────────────────────►
   └─LRECL(──┬─logical_record_length─┬─)─┘
             ├─x─────────────────────┤
             └─nnnnnK────────────────┘

   ┌─NCP(1)──────────────────────────┐
►──┤                                 ├──────────────────────────────────────────────►
   └─NCP(no._of_channel_programs)────┘
```

```
►─┬─INPUT──┬─┬─EXPDT(year_day)──────┬─┬─BFALN(─┬─F─┬─)─┬──►
  └─OUTPUT─┘ └─RETPD(no._of_days)────┘ │        └─D─┘   │
                                       │                │
►──┬─OPTCD(─┬─A─┬─)─┬─┬─EROPT(─┬─ACC─┬─)─┬─┬─BFTEK(─┬─S─┬─)─┬──►
   │        │ B │   │ │        │ SKP │   │ │        │ E │   │
   │        │ C │   │ │        └─ABE─┘   │ │        │ A │   │
   │        │ E │   │ │                  │ │        └─R─┘   │
   │        │ F │   │ │                  │ │                │
   │        │ H │   │ │                  │ │                │
   │        │ J │   │ │                  │ │                │
   │        │ Q │   │ │                  │ │                │
   │        │ R │   │ │                  │ │                │
   │        │ T │   │ │                  │ │                │
   │        │ W │   │ │                  │ │                │
   │        └─Z─┘   │ │                  │ │                │
   │                │ │                  │ │                │
►──┬─RECFM(─┬─A─┬─)─┬─┬─DIAGNS(TRACE)─┬─┬─LIMCT(search_number)─┬──►
   │        │ B │   │ │              │ │                      │
   │        │ D │   │ │              │ │                      │
   │        │ F │   │ │              │ │                      │
   │        │ M │   │ │              │ │                      │
   │        │ S │   │ │              │ │                      │
   │        │ T │   │ │              │ │                      │
   │        │ U │   │ │              │ │                      │
   │        └─V─┘   │ │              │ │                      │
   │                │ │              │ │                      │
►──┬─BUFOFF(─┬─block_prefix_length─┬─)─┬─DSORG(─┬─DA──┬─)─┬──►
   │         │ L                   │   │        │ DAU │   │
   │         └─────────────────────┘   │        │ PO  │   │
   │                                   │        │ POU │   │
   │                                   │        │ PS  │   │
   │                                   │        │ PSU │   │
   │                                   │        └─────┘   │
   │                                   │                  │
►──┬─DEN(─┬─0─┬─)─┬─┬─TRTCH(─┬─C─┬─┬─NOCOMP─┬─)─┬──────────────►
   │      │ 1 │   │ │        │ E │ │        │   │
   │      │ 2 │   │ │        │ T │ └─COMP───┘   │
   │      │ 3 │   │ │        └─ET─┘              │
   │      └─4─┘   │ │                            │
   │              │ └─KEYLEN(bytes)──────────────┘
   │              │
►──┬─KEYOFF(offset)─┬─┬─RECORG(─┬─ES─┬─)─┬─┬─PROTECT─┬──────────►
   │                │ │         │ KS │   │ │         │
   │                │ │         │ LS │   │ │         │
   │                │ │         └─RR─┘   │ │         │
   │                │ │                  │ │         │
►──┬─COPIES(nnn──────────────────────────)─┬─┬─BURST──┬──────────►
   │                │ │                    │ │ NOBURST│
   │                │ └─,(─┬─group_value─┬─)─┘ └────────┘
   │                │      │             │
►──┬─CHARS(─┬─table_name─┬─)─┬─┬─FLASH(overlay_name,─┬─────────┬─)─┬──►
   │        │            │   │ │                     │ copies  │   │
   │        │            │   │ │                     └─────────┘   │
```

```
►──┬─MODIFY(module_name──────────)──┬──┬─FCB(image_id──────────────)──┬──►
   │                  └─,trc─┘      │  │              ├─,ALIGN─┤     │
   │                                │  │              └─,VERIFY─┘     │

►──┬─FORMS(forms_name)──┬──┬──────────────────────────────────────────►
   │                    │  │
   │                    │  └─OUTDES(──┬──────────────────────┬──)──┘
   │                    │             ▼ output_descriptor_name ◄
   │                    │
   │                    │
   │                    │

►──┬─SPIN(──┬─UNALLOC─┬──)──┬──┬─SEGMENT(page_count)──┬──►
   │        │         │     │  │                      │
   │        └─NO──────┘     │  │                      │

►──┬─DSNTYPE(──┬─LIBRARY─┬──)──┬──┬─UCS(universal_character_set_name)──┬──►
   │           ├─PDS─────┤     │  │                                    │
   │           ├─HFS─────┤     │  │                                    │
   │           └─PIPE────┘     │  │                                    │

►──┬─WRITER(external_writer_name)──┬──┬──────────────────────────────►
   │                               │  │
   │                               │  └─PATH(──┬──────────────┬──)──┘
   │                               │           ▼ /pathname    ◄
   │                               │

►──┬──────────────────────────────────────────────────────────────────►
   │
   └─PATHDISP(──┬─KEEP───┬──┬─,KEEP───┬──)──┘
                │        │  │         │
                └─DELETE─┘  └─,DELETE─┘

►──┬──────────────────────────────────────────────────────────────────►
   │
   └─PATHMODE(──┬──────────────────────┬──)──┘
                ▼ file_access_attribute ◄

►──┬──────────────────────────────────────────────────────────────────►
   │
   └─PATHOPTS(──┬──────────────┬──)──┬──┬─FILEDATA(──┬─BINARY─┬──)──┬──►
                ▼ file_option  ◄     │  │            │        │     │
                                     │  │            └─TEXT───┘     │

►──┬─RLS(──┬─NRI─┬──)──┬──►◄
   │       │     │     │
   │       └─CR──┘     │
```

ALLOCATE Command Operands

DATASET(*dsname* **| *) | DSNAME(***dsname* **| *)**

specifies the name or a list of names of the data sets that are to be allocated. If a list of data set names is entered, ALLOCATE allocates and concatenates non-VSAM data sets. The data set name must include the descriptive (rightmost) qualifier and can contain a member name in parentheses.

If you specify a password, you are not prompted for it when you open a non-VSAM data set.

If you want to allocate a file to the terminal for input or output, only the following operands are processed:

```
ALLOCATE DA(*) FILE, DDNAME, BLOCK, BLKSIZE, USING
```

If you allocate more than one data set to your terminal, the block size and other data set characteristics, which default on the first usage, are also used for all other data sets. This happens for input or output. Use the ATTRIB command and the USING operand of ALLOCATE to control the data set characteristics.

- Data sets residing on the same physical tape volume cannot be allocated concurrently.

- The following items should be noted when using the concatenate function:
  - The data sets specified in the list must be cataloged. You can use the CATALOG operand of either the ALLOCATE or FREE commands to catalog a data set.
  - The maximum number of data sets that you can concatenate is 255. This maximum applies to sequential data sets. For more information on the maximum number of partitioned data sets that you can concatenate, see *DFSMS/MVS Using Data Sets*. The data sets to be concatenated must all have the same record format (RECFM). If you omit the BLKSIZE operand from the concatenation statement, the system uses the block size of the first data set. If the data sets have different block sizes, you must specify the data set with the largest block size first. In most situations the access method automatically handles block size differences. For more information see *DFSMS/MVS Using Data Sets*.
  - The data set group is concatenated. You must free it to deconcatenate it. The file name specified for the FILE or DDNAME operand on the ALLOCATE command must be the same as that specified for the FILE or DDNAME operand on the FREE command.
  - The system ignores all operands except for DATASET/DSNAME, FILE/DDNAME, and status operands. The following DCB attribute operands are allowed when concatenating data sets:

    ```
    BLKSIZE   INPUT     EROPT     BUFOFF   USING
    BUFL      OUTPUT    BFTEK     DEN
    BUFNO     BFALN     DIAGNS    TRTCH
    NCP       OPTCD     LIMCT     KEYLEN
    ```

- To allocate a member of a generation data group, specify the fully-qualified data set name, including the generation number.
- The ALLOCATE command verifies the existence of a data set on the specified volume(s) only when the VOLUME operand is also specified.
- When you invoke ALLOCATE to perform dsname dynamic allocation, an “allocation environment” already exists for your request. It consists of the allocation requests, made via your JCL or internal dynamic allocation, that have not yet been deallocated. These resources are considered to be *existing allocations*, and are considered first in the attempt to fill your ALLOCATE requests.

  If possible, ALLOCATE will use an existing allocation to satisfy your dsname allocation request. Although some parameters can be changed if necessary, the request and the existing allocation must match according to several criteria before the allocation can be selected to satisfy your request.

  For more information about this criteria and using an existing allocation, see *OS/390 MVS Programming: Authorized Assembler Services Guide*.

DUMMY

specifies that no devices or external storage space are to be allocated to the data set, and no disposition processing is to be performed on the data set. Entering the DUMMY operand has the same effect as specifying NULLFILE as the data set name on the DATASET or DSNAME operand.

If you want to allocate a DUMMY data set, only the following operands are processed:

```
ALLOCATE DUMMY, FILE, DDNAME, BLOCK, BLKSIZE, USING
```

The following operands are not valid when you specify a DUMMY data set:

```
COPIES, DEST
```

FILE(*name*) | DDNAME(*name*)
specifies the name to be associated with the data set. It can contain up to eight characters. (This name corresponds to the name on the data definition (DD) statement in job control language and must match the ddname in the data control block (DCB) that is associated with the data set.) For PL/I, this name is the file name in a DECLARE statement and has the form DCL file name FILE; for example, DCL MASTER FILE. For COBOL, this name is the external name used in the ASSIGN TO clause. For FORTRAN, this name is the data set reference number that identifies a data set and has the form `FTxxFyyy`, for instance, FT06F002.

If you omit this operand, the system assigns an available file name (*ddname*) from a data definition statement in the procedure that is invoked when you enter the LOGON command.

Do not use special ddnames unless you want to use the facilities those names represent to the system.

For more information on the special ddnames SYSMDUMP, SYSUDUMP, SYSCHK, SYSCKEOV, and SYSABEND see *OS/390 MVS JCL Reference*.

For more information on the special ddnames JOBCAT, JOBLIB, STEPCAT, and STEPLIB see *OS/390 MVS JCL Reference*.

OLD | SHR | MOD | NEW | SYSOUT(*class*)

OLD indicates the data set currently exists and you require exclusive use of the data set. The data set should be cataloged. If it is not, you must specify the VOLUME operand. OLD data sets are retained by the system when you free them from allocation. The DATASET or DSNAME operand is required.

SHR indicates the data set currently exists, but you do not require exclusive use of the data set. Others can use it concurrently. ALLOCATE assumes the data set is cataloged if the VOLUME operand is not entered. SHR data sets are retained by the system when you free them. The DATASET or DSNAME operand is required.

MOD indicates you want to append data to the end of the sequential data set. Do not catalog the data set or specify VOLUME=SER when you use DISP=MOD to create a new data set. After creation, the system changes the disposition of the data set to NEW. If the data set does not exist, a new data set is created and the disposition is changed to NEW. MOD data sets are retained by the system when you free them. The DATASET or DSNAME operand is required.

NEW (non-VSAM only, unless SMS is running) indicates the data set does not exist and it is to be created. For new partitioned data sets, you must specify the DIR operand. If you specify a data set name, a NEW data set is kept and cataloged. If you do not specify a data set name, it is deleted when you free it or log off.

SMS will only manage data sets that were allocated with a disposition of NEW while SMS was active.

SYSOUT[(*class*)] indicates the data set is to be a system output data set. An optional subfield can be defined giving the output class of the data set. Output data is initially directed to the job entry subsystem (JES) and can later be transcribed to a final output device. The final output device is associated with output class by the installation. After transcription by the job entry subsystem, SYSOUT data sets are deleted.

The system generates names for SYSOUT data sets; therefore, you should not specify a data set name when you allocate a SYSOUT data set. If you do, the system ignores it.

You can specify the OUTDES operand of the ALLOCATE command or the PRINTDS command to supply the name or names of the output descriptors that were created by the OUTPUT JCL statements in the LOGON procedure. Specifying OUTDES eliminates the need to supply information related to the printer or the type of printing to be done. For more information about establishing OUTPUT JCL statements in the LOGON procedure, see *OS/390 TSO/E Customization*.

If you do not specify an output class value, the ALLOCATE command uses the default output class, which was determined during logon for your user ID. If no default class was set for your user ID, JES assigns an output class according to its assignment procedures, using any referenced or default output descriptors.

If you want to allocate a SYSOUT data set, the following operands are used exclusively with SYSOUT:

```
ALLOCATE DDNAME, SYSOUT, DEST, HOLD, NOHOLD, COPIES, BURST/NOBURST,
CHARS, FLASH, MODIFY, FCB, FORMS, OUTDES, UCS, WRITER, SPIN, SEGMENT
```

If you do not specify OLD, SHR, MOD, NEW, or SYSOUT, a default value is assigned or a value is prompted for, depending on the other operands specified:

- If the LIKE operand or any space operands (SPACE, DIR, BLOCK, BLKSIZE, AVBLOCK, TRACKS, or CYLINDERS) are specified, then the status defaults to NEW.
- If the COPIES operand is specified, then the status defaults to SYSOUT.
- If the DATASET/DSNAME operand is entered without the LIKE operand or any space operands, then the status defaults to OLD.
- If the LIKE operand, the DATASET/DSNAME operand, and the space operands are all omitted, you are prompted to enter a status value.

VOLUME(*serial_list*)
specifies the serial number(s) of an eligible direct access volume(s) on which a new data set is to reside or on which an old data set is located. If you specify VOLUME for an old data set, the data set must be on the specified volume(s) for allocation to take place. If you do not specify VOLUME, new data sets are allocated to any eligible direct access volume. Eligibility is determined by the UNIT information in your procedure entry in the user attribute data set (UADS). You can specify up to 255 volume serial numbers.

With SMS, the VOLUME operand is not recommended. The system determines the UNIT and VOLUME from the storage class (STORCLAS operand) associated with the data set. If SMS does not manage the data set and you want to allocate a data set to a *specific* volume, explicitly specify VOLUME.

DATACLAS(*data_class_name***)**
with SMS, specifies the name, 1 to 8 characters, of the data class for the data set.

Using the DATACLAS operand to define the data class makes specifying all the attributes for a data set unnecessary. For example, the storage administrator might provide RECFM, LRECL, RECORG, KEYLEN, and KEYOFF as part of the data class definition. However, you can override the DATACLAS operand by explicitly specifying the appropriate operands on the ALLOCATE command. If you specify DATACLAS for an *existing* data set, SMS ignores it.

The data class defines the following data set allocation attributes:

- Data set organization (record organization or record format):
  - Record organization (RECORG)
  - Record format (RECFM)
- Record length (LRECL)
- Key length (KEYLEN)
- Key offset (KEYOFF)
- Space allocation
  - AVGREC
  - SPACE
- Expiration date (EXPDT) or retention period (RETPD)
- Volume number (VOLUME)
- For VSAM data sets, the following:
  - IMBED or REPLACE
  - CISIZE
  - FREESPACE
  - SHAREOPTIONS

Note: Without SMS, the system syntax checks and then ignores the DATACLAS operand.

MGMTCLAS(*management_class_name***)**
with SMS, specifies the name, 1 to 8 characters, of the management class for a new data set. When possible, do not specify MGMTCLAS. Instead, use the default your storage administrator provides through the ACS routines.

After the data set is allocated, attributes in the management class control the following:

- The migration of the data set, which includes migration from primary storage to Data Facility Hierarchical Storage Manager (DFHSM) owned storage to archival storage.
- The backup of the data set, which includes frequency of backup, number of versions, and retention criteria for backup versions.

Note: Without SMS, the system syntax checks and then ignores the MGMTCLAS operand.

STORCLAS(*storage_class_name***)**
with SMS, specifies the name, 1 to 8 characters, of the storage class. If you have no specific storage class requirements, do not specify STORCLAS.

Instead, use the default your storage administrator provides through the ACS routines.

The storage class replaces the storage attributes that are specified on the UNIT and VOLUME operand for non-SMS-managed data sets.

An “SMS-managed data set” is defined as a data set that has a storage class assigned. A storage class is assigned when the installation-written ACS routine selects a storage class for the new data set.

Note: Without SMS, the system syntax checks and then ignores the STORCLAS operand.

SPACE(*quantity***,***increment***)**
specifies the amount of space to be allocated for a new data set.

quantity specifies the number of units of space to be allocated initially for a data set.

increment specifies the number of units of space to be added to the data set each time the previously allocated space has been filled. You must specify the primary quantity along with the increment value.

If you omit this operand, the system uses the IBM-supplied default value SPACE(4,24) AVBLOCK (8192). However, your installation might have changed the default; see *OS/390 MVS Programming: Authorized Assembler Services Guide*.

With SMS, the system does not prompt you for the space. To have the system obtain the amount of space, specify both the AVGREC and AVBLOCK operand.

Specifying AVGREC requires you to also specify an average record length. You can use the AVBLOCK keyword. If you do not specify BLOCK or BLKSIZE, the system determines the optimized value. The amount of space requested is determined as follows:

- BLOCK(value) or BLKSIZE(value): Multiply the value of the BLOCK/BLKSIZE operand by the quantity value of the SPACE operand. With SMS, if you do not specify BLKSIZE, the system determines an optimum DCB block size for the new data set.
- AVBLOCK(value): Multiply the value of the AVBLOCK operand by the quantity value of the SPACE operand. The AVBLOCK is the average logical record length and should be coded with the AVGREC(U, K, or M) operand.
- TRACKS: The quantity value of the SPACE operand is the number of tracks you are requesting.
- CYLINDERS: The quantity value of the SPACE operand is the number of cylinders you are requesting. When you specify SPACE, you must specify a unit of space. SPACE can be specified for SYSOUT, NEW, and MOD data sets. The SPACE parameter has no effect, if SYSOUT is coded also.

To indicate the unit of space for allocation, you must specify one of the following:

- BLOCK(value)
- BLKSIZE(value)
- AVBLOCK(value)

- TRACKS
- CYLINDERS

See the information above concerning the AVGREC operand about how the amount of space is determined for each of these keywords.

BLOCK(*value*)
specifies the average length of the blocks written to the data set. The maximum block value used to determine space to be allocated is 65,535. The block value is the unit of space used by the SPACE operand. A track or a cylinder on one device can represent a different amount of storage (number of bytes) than a track or a cylinder on another device. The unit of space value is determined in one of the following ways:

- From the default value, which is SPACE (4,24) AVBLOCK (8192), when no space operands (that is, SPACE, BLOCK, TRACKS, AVBLOCK, or CYLINDERS) are specified.
- From the BLOCK operand, if specified.
- From the model data set, if the LIKE operand is specified and BLOCK, TRACKS, AVBLOCK, or CYLINDERS are not specified on ALLOCATE.
- From the BLKSIZE operand, if BLOCK is not specified.

Note that the default value for space is installation dependent. Your installation might have changed the default value.

If you do not specify BLKSIZE, the system attempts to determine an optimum DCB block size for the new data set.

AVBLOCK(*value*)
specifies the average length (in bytes) of the records that are written to the data set.

With SMS, to allocate space in a quantity of records instead of blocks, tracks, or cylinders, use both the AVBLOCK and AVGREC operands. Do not code the BLOCK, TRACKS, or CYLINDERS operands.

TRACKS
specifies the unit of space is to be a track.

With SMS, if you do not want to explicitly specify TRACKS, specify both the AVGREC and AVBLOCK operands instead of the TRACKS operand.

CYLINDERS
specifies the unit of space is to be a cylinder.

With SMS, if you do not want to explicitly specify CYLINDERS, specify both the AVGREC and AVBLOCK operands instead of the CYLINDERS operand.

AVGREC(U | K | M)
together with AVBLOCK in SMS, determines the size of the average record length. Following are the values for AVGREC:

U Use the primary and secondary space quantities specified on the SPACE operand.

K Multiply primary space quantity and secondary space quantity specified on the SPACE operand by 1024 (1 K).

M Multiply primary space quantity and secondary space quantity specified on the SPACE operand by 1,048,576 (1 M).

For example, if you want to allocate 12 mega units of space, you can specify SPACE(12) AVGREC(M), which results in 12 * 1,048,576 = 12,582,912.

To get a secondary space quantity, you would specify SPACE(12,1) AVGREC(M). This specification provides 12 mega units of primary space and 1 mega unit of secondary space. The unit of space is determined by either BLOCK, BLKSIZE, or AVBLOCK.

If AVGREC(K), AVBLOCK(128), and SPACE(5,2) are specified, the average record length is 128, the primary quantity of records is 5K, and the second quantity of records is 2K.

BLKSIZE(*blocksize***)**

specifies the block size for the data set. The maximum allowable decimal value for block size recorded in the DCB is 32,760.

With DASH, labelled tape or spooled data set, or a TSO terminal, if you do not specify BLKSIZE, the system determines the optimum DCB block size for the new data set unless you have undefined length records. For more information see *DFSMS/MVS Using Data Sets*.

The DCB block size is determined in one of the following ways:

- If USING is specified, from the attribute list. You cannot use the BLKSIZE operand on ALLOCATE for the block size.
- If you specify BLKSIZE on ALLOCATE, from the BLKSIZE operand.
- If LIKE is specified and BLKSIZE is not specified on ALLOCATE, from the model data set.

  With SMS, BLKSIZE is *not* copied from the model data set. Without SMS, BLKSIZE is copied from the model data set.
- If neither USING, BLKSIZE, nor LIKE is specified, from the BLOCK operand.

The block size that you specify to be recorded in the data control block (DCB) must be consistent with the requirements of the RECFM operand. If you specify:

- RECFM(F), then the block size must be equal to or greater than the logical record length.
- RECFM(F,B), then the block size must be an integral multiple of the logical record length.
- RECFM(V), then the block size must be equal to or greater than the largest block in the data set. (Note: For unblocked variable-length records, the size of the largest block must allow space for the four-byte block descriptor word in addition to the largest logical record length. The logical record length must allow space for a four-byte record descriptor word.)
- RECFM(V,B), then the block size must be equal to or greater than the largest block in the data set. For block variable-length records, the size of the largest block must allow space for the four-byte block descriptor word in addition to the sum of the logical record lengths that will go into the block.

Each logical record length must allow space for a four-byte record descriptor word. Because the number of logical records can vary, you must estimate the optimum block size and the average number of records for each block based on your knowledge of the application that requires the I/O.

- For files allocated to the TSO/E terminal with RECFM(U) and BLKSIZE(80), one character is truncated from the line. That character (the last byte) is reserved for an attribute character.
- Specify BLKSIZE with the ALLOCATE command when using the LIKE operand, because optimal BLKSIZE is not determined by the system for a RECFM(U) data set.

The operands BLOCK, BLKSIZE, AVBLOCK, TRACKS, and CYLINDERS can be specified for SYSOUT, NEW, or MOD data sets. The operands BLOCK or BLKSIZE can also be specified for dummy or terminal data sets.

DIR(*integer***)**
specifies the number of 256 byte records that are to be allocated for the directory of a new partitioned data set. This operand must be specified if you are allocating a new partitioned data set.

ALTFILE(*name***)**
specifies the name associated with the SYSIN subsystem data set that is to be allocated. It can contain up to 8 characters. This operand is used primarily in the background.

DEST({*destination* **|** *destination***.***user_id***})**
specifies a specific remote workstation or a user at a specific remote workstation to which SYSOUT data sets are directed upon deallocation. Specify 1 to 8 characters for either the destination or the user ID.

REUSE
specifies the file name being allocated is to be freed and reallocated if it is currently in use.

When you allocate a data set with file name or ddname, give it a disposition of SHR or OLD. You cannot use the REUSE operand to reallocate a file from a disposition of OLD to a disposition of SHR. However, you can first free the file with a disposition of OLD, then reallocate it with a disposition of SHR.

HOLD | NOHOLD

HOLD specifies the data set is to be placed on a HOLD queue upon deallocation.

NOHOLD specifies processing of the output should be determined by the HOLD/NOHOLD specification associated with the particular SYSOUT class specified. However, the specification associated with the SYSOUT class can be overridden by using the NOHOLD operand on the FREE command.

UNIT(*type***)**
specifies the type of the unit to which a file or data set is to be allocated. You can specify an installation-defined group name, a generic device type, or a specific device number.

Since MVS/ESA SP 5.1 device numbers can be up to four digits long for increased addressability of I/O devices. If the string representing a device number is longer than three hexadecimal characters (for example, `X'1ABC'` or `X'3390'`), it *must* be preceded by a slash (/). A device number *may* be preceded by a slash even if it less than four characters long.

This distinguishes numeric-only device numbers from generic device types that contain only four-character numerics.

If volume information is not supplied (volume and unit information is retrieved from a catalog), the unit type that is coded overrides the unit type from the catalog.

With SMS, the UNIT operand is not recommended. The system determines the UNIT and VOLUME from the storage class associated with the data set. If the storage administrator has set up a default unit type under SMS regardless of whether the data set is SMS-managed, you do not have to specify UNIT.

Without SMS, if you do not specify UNIT, the default UNIT is obtained from the user attribute data set (SYS1.UADS) or the security system being used (if SYS1.UADS is not being used).

The default specification for the UNIT operand relates to the LOGON procedure selected in the foreground. If the ALLOCATE command is to be executed in the background, and the UNIT operand is not specified, the default operand value is *not* obtained from the user attribute data set (SYS1.UADS) or the security system. See the *OS/390 TSO/E User's Guide*, for a description of command processing differences when executing foreground commands from a background job.

UCOUNT(*count*)
specifies the maximum number of devices to be allocated, where count is a value from 1-59.

PARALLEL
specifies one device is to be mounted for each volume specified on the VOLUME operand or in the catalog.

LABEL(*type*)
specifies the kind of label processing to be done. Type can be one of the following: SL, SUL, AL, AUL, NSL, NL, LTM, or BLP. These types correspond to the present JCL label-type values.

ACCODE(*access_code*)
specifies or changes the accessibility code for an ANSI output tape data set. The purpose of the code is to protect the ANSI data set from unauthorized use. Up to 8 characters (A-Z) are permitted in the access code, but only the first character is validated by ANSI. The first character must be an uppercase alphabetic character.

POSITION(*sequence_no.*)
specifies the relative position (1-9999) of the data set on a multiple data set tape. The sequence number corresponds to the data set sequence number field of the label operand in JCL.

MAXVOL(*count*)
specifies the maximum number (1-255) of volumes a data set can reside upon. This number corresponds to the count field on the VOLUME operand in JCL.

PRIVATE
specifies the private volume use attribute be assigned to a volume that is not reserved or permanently in resident. This operand corresponds to the PRIVATE keyword of the VOLUME operand in JCL.

If VOLUME and PRIVATE operands are not specified and the value specified for MAXVOL exceeds the value specified for UCOUNT, the system does not demount any volumes when all of the mounted volumes have been used, causing abnormal termination of your job. If PRIVATE is specified, the system demounts one of the volumes and mounts another volume in its place so that processing can continue.

VSEQ(*vol_seq_no.***)**
specifies at which volume (1-255) of a multi-volume data set processing is to begin. This operand corresponds to the volume sequence number on the VOLUME operand in JCL. VSEQ should only be specified when the data set is cataloged.

LIKE(*model_dsname***)**
specifies the name of an existing model data set whose attributes are to be used as the attributes of the new data set being allocated. This data set must be cataloged and must reside on a direct access device. The volume must be mounted when you issue the ALLOCATE command.

With SMS, ALLOCATE assigns attributes to a new data set by copying all of the following attributes from the model data set:

- Primary space quantity (SPACE)
- Secondary space quantity (SPACE)
- Space unit (BLOCK, AVBLOCK, TRACKS, CYLINDERS)
- AVGREC unit (kilobyte, megabyte)
- Directory space quantity (DIR)
- Data set organization:
  - RECORG for a VSAM data set
  - DSORG for a non-VSAM data set
- Logical record length (LRECL)
- Key length (KEYLEN)
- Record format (RECFM)
- Key offset (KEYOFF)

Note, however, that if SMS is active, the following attributes are *not* copied:

Optional services code (OPTCD) - for ISAM data sets only
Block size (BLKSIZE)
Volume sequence number (VSEQ)
Data set expiration date (EXPDT)

You can use the LIKE operand even if none of your existing data sets have the exact attribute values you want to use for a new data set. You can override attributes copied from a model data set by specifying the LIKE operand and the operands corresponding to the attributes you want to override on the ALLOCATE command.

The following items should be considered when using the LIKE operand:

- NEW is the only valid data set status that can be specified with the LIKE operand.
- The LIKE operand must be specified with the DATASET operand.

- Only one data set name can be specified on the DATASET/DSNAME operand.
- With SMS, block size is *not* copied from the model data set. If you do not specify the block size, the system determines the optimal block size for the data set. However, for a RECFM(U) data set, specify the block size with the ALLOCATE command when using the LIKE operand, because optimal block size is not determined by the system.

  The attributes copied from the model data set override attributes from the data class.
- If the new data set to be allocated is specified with a member name, indicating a partitioned data set (PDS), then you are prompted for directory blocks unless that quantity is explicitly specified on the ALLOCATE command or defaulted from the LIKE data set.

  If the new data set name is specified with a member name, but the model data set is sequential and you have not explicitly specified the quantity for directory blocks, then you are prompted for directory blocks.
- If you specify the directory value as zero and the model data set is a partitioned data set, then the new data set is allocated as a sequential data set.
- Unless you explicitly code the SPACE operand for the new data set, the system determines the space to be allocated for the new data set by adding up the space allocated in the first three extents of the model data set. Therefore, the space allocated for the new data set will generally not match the space that was specified for the model data set. Also, the system allocates the space for the new data set in tracks.

Note that the LIKE, REFDD, and USING operands are mutually exclusive.

USING(*attr_list_name***)**
specifies the name of a list of attributes that you want to have assigned to the data set you are allocating. The attributes in the list correspond to, and are used for, data control block (DCB) operands. (Note to users familiar with batch processing: These DCB operands are the same as those normally specified by using JCL and data management macro instructions.)

An attribute list must be stored in the system *before* you use this operand. You can build and name an attribute list by using the ATTRIB command. The ATTRIB command allocates a file with the name being the (*attr_list_name*) specified in the ATTRIB command. The name that you specify for the list when you use the ATTRIB command is the name that you must specify for this USING(*attr_list_name*) operand.

USING, LIKE, and REFDD are mutually exclusive.

Note: You cannot specify the DCB operands (operands that are also on the ATTRIB command) with the USING operand.

REFDD(*file_name***)**
if SMS is active, specifies the ddname of an existing data set whose attributes are copied to the new data set. The following attributes are copied to the new data set:

- Data set organization (record organization or record format):
  - Record organization (RECORG)

  - Record format (RECFM)
- Directory space quantity (DIR)
- Record length (LRECL)
- Key length (KEYLEN)
- Key offset (KEYOFF)
- Space allocation:
  - AVGREC
  - SPACE
  - TRACK, CYLINDER, BLOCK

When you allocate a data set with REFDD, specify a disposition of NEW. For example,

```
alloc da('user1.my.text') fi(dd1) shr reu
alloc f(dd2) da('user2.your.data') new refdd(dd1)
```

USER1.MY.TEXT is an existing and cataloged data set. Note that the block size (BLKSIZE) is *not* copied to the new data set USER2.YOUR.DATA.

The retention period (RETPD) or expiration date (EXPDT) is not copied to the new data set.

The LIKE, REFDD, and USING operands are mutually exclusive.

Note: Without SMS, the system syntax checks and ignores the REFDD operand.

SECMODEL(*profile_name***[,GENERIC])**
specifies the name of an existing RACF data set profile that is to be copied to the discrete profile. Use SECMODEL when you want a different RACF data set profile than the default profile selected by RACF, or when there is no default profile. The model profile can be a:

- RACF model profile
- RACF discrete data set profile
- RACF generic data set profile

GENERIC identifies that the profile name is a generic data set profile. For example, if you want to create a generic data set profile, specify SECMODEL(*profile_name*,GENERIC).

The following information from the RACF data set profile is copied to the discrete data set profile of the new data set:

- OWNER indicates the user or group assigned as the owner of the data set profile.
- ID indicates the access list of users or groups authorized to access the data set.
- UACC indicates the universal access authority associated with the data set.
- AUDIT/GLOBALAUDIT indicates which access attempts are logged.
- ERASE indicates that the data set is to be erased when it is deleted (scratched).
- LEVEL indicates the installation-defined level indicator.
- DATA indicates installation-defined information.
- WARNING indicates that an unauthorized access causes RACF to issue a warning message, but allows access to the data set.

- SECLEVEL indicates the name of an installation-defined security level.

Note: Without SMS, the system syntax checks and ignores the SECMODEL operand.

For more information about RACF, see *OS/390 Security Server (RACF) Command Language Reference*.

RELEASE
specifies unused space is to be deleted when the data set is closed.

If you use RELEASE for a new data set with the BLOCK or BLKSIZE operand, then you must also use the SPACE operand.

ROUND
specifies the allocated space be equal to one or more cylinders. This operand should be specified only when space is requested in units of blocks. This operand corresponds to the ROUND operand on the SPACE parameter in JCL.

KEEP | DELETE | CATALOG | UNCATALOG

KEEP [1] specifies the data set is to be retained by the system after it is freed.

DELETE [1] specifies the data set is to be deleted after it is freed.

CATALOG [1] specifies the data set is to be retained by the system in a catalog after it is freed.

UNCATALOG [1] specifies the data set is to be removed from the catalog after it is freed. If you do not want the system to retain the data set, you must also specify the DELETE operand.

BUFL(*buffer_length***)**
specifies the length, in bytes, of each buffer in the buffer pool. Substitute a decimal number for buffer_length. The number must not exceed 32,760.

If you omit this operand and the system acquires buffers automatically, the BLKSIZE and KEYLEN operands are used to supply the information needed to establish buffer length.

BUFNO(*number_of_buffers***)**
specifies the number of buffers to be assigned for data control blocks. Substitute a decimal number for number_of_buffers. The number must never exceed 255, and you can be limited to a smaller number of buffers depending on the limit established when the operating system was generated. The following table shows the condition that requires you to include this operand.

When you use one of the following methods of obtaining the buffer pool, then:

[1] A command processor can modify the final disposition of this operand.

(1) BUILD macro instruction	(1) You must specify BUFNO.
(2) GETPOOL macro instruction	(2) The system uses the number that you specify for GETPOOL.
(3) Automatically with BPAM or BSAM	(3) You must specify BUFNO if the program was designed to use buffers obtained during OPEN.
(4) Automatically with QSAM	(4) You may omit BUFNO and accept the system default, which is five or one, except with an extended format data set. For more information see *DFSMS/MVS Using Data Sets*.

LRECL({*logical_record_length* **| X |** *nnnnn***K})**
specifies the length, in bytes, of the largest logical record in the data set. You must specify this operand for data sets that consist of either fixed-length or variable-length records.

If SMS is active, you can use the DATACLAS operand in place of LRECL to specify the logical record length. If you specify LRECL, the system determines the block size.

The logical record length must be consistent with the requirements of the RECFM operand and must not exceed the block size (BLKSIZE operand) except for variable-length spanned records. If you specify:

- RECFM(V) or RECFM(V B), then the logical record length is the sum of the length of the actual data field plus four bytes for a record descriptor word.
- RECFM(F) or RECFM(F B), then the logical record length is the length of the actual data fields.
- RECFM(U), then you should omit the LRECL operand.

LRECL(*nnnnn*K) allows users of ISO/ANSI extended logical records and QSAM locate mode users to specify a K multiplier on the LRECL operand. *nnnnn* can be a number within 1-16,384. The K indicates that the value is multiplied by one thousand and twenty-four (1024).

For variable-length spanned records (VS or VBS) processed by QSAM (locate mode) or BSAM, specify LRECL (X) when the logical record exceeds 32756 bytes.

NCP(*number_of_channel_programs***)**
specifies the maximum number of READ or WRITE macro instructions allowed before a CHECK macro instruction is issued. The maximum number must not exceed 255 and must be less than 255 if the address space does not have enough virtual storage. If you are using chained scheduling, you must specify an NCP value greater than 1. If you omit the NCP operand, the default value is 1.

INPUT
specifies a BSAM data set opened for INOUT or a BDAM data set opened for UPDAT is to be processed for input only. This operand overrides the INOUT (BSAM) option or UPDAT (BDAM) option in the OPEN macro instruction to INPUT. This is useful if you only have READ access authority to the data set.

OUTPUT
specifies a BSAM data set opened for OUTIN or OUTINX is to be processed for output only. This operand overrides the OUTIN option in the OPEN macro

instruction to OUTPUT or the OUTINX option in the OPEN macro instruction to EXTEND.

EXPDT(*year_day*)
specifies the data set expiration date. Specify the year and day in one of two forms:

1. *yyddd*, where *yy* is the last two-digit number for the year and *ddd* is the three-digit number for the day of the year. The maximum value for the year is 99 (for 1999). The minimum value for the day is 000 and the maximum value is 366.

   If you specify 99365 or 99366, the system retains your data sets permanently. Do not use those dates as an expiration date. Use them as "no scratch" dates only.

2. *yyyy/ddd*, where *yyyy* is the four-digit number for the year and *ddd* is the three-digit number for the day of the year. The slash is required. The maximum value for the year is 2155. The minimum value for the day is 000 and the maximum value is 366.

If you specify 1999/365 or 1999/366, the system retains your data sets permanently. Do not use those dates as an expiration date. Use them as “no scratch” dates only. If you code any of these special values after 1999, they will have the same effect.

EXPDT is mutually exclusive with RETPD.

If SMS is active, the expiration date might have been defined by the DATACLAS operand.

RETPD(*number_of_days*)
specifies the data set retention period in days. The value can be a one- to four-digit decimal number. If the system calculates the date as the equivalent of 1999/365 or 1999/366, the system does not use that date. Instead it uses 2000/001.

RETPD is mutually exclusive with EXPDT.

BFALN({F | D})
specifies the boundary alignment of each buffer as follows:

F Each buffer starts on a fullword boundary that might not be a doubleword boundary.

D Each buffer starts on a doubleword boundary.

If you do not specify this operand, the system defaults to a doubleword boundary.

OPTCD(A, B, C, E, F, H, J, Q, R, T, W and/or Z)
specifies the following optional services that you want the system to perform. For a detailed discussion of these services, see the OPTCD subparameter of the DCB parameter in *OS/390 MVS JCL Reference*.

A specifies the actual device addresses be presented in READ and WRITE macro instructions.

B specifies the end-of-file (EOF) recognition be disregarded for tapes.

C specifies the use of chained scheduling.

E requests an extended search for block or available space.

F specifies feedback from a READ or WRITE macro instruction should return the device address in the form it is presented to the control program.

H requests the system to check for and bypass.

J specifies the character after the carriage control character is the table reference character for that line. The table reference character tells TSO/E which character arrangement table to select when printing the line.

Q requests the system to translate a magnetic tape from ASCII to EBCDIC or from EBCDIC to ASCII.

R requests the use of relative block addressing.

T requests the use of the user totaling facility.

W requests the system to perform a validity check when data is written on a direct access device.

Z requests the control program to shorten its normal error recovery procedure for input on magnetic tape.

You can request any or all of the services by combining the values for this operand. You can combine the characters in any sequence, being sure to separate them with blanks or commas.

EROPT({ACC | SKP | ABE})
specifies the option you want to execute if an error occurs when a record is read or written. The options are:

ACC to accept the block of records in which the error was found.

SKP to skip the block of records in which the error was found.

ABE to end the task abnormally.

BFTEK({S | E | A | R})
specifies the type of buffering that you want the system to use. The types that you can specify are:

S Simple buffering
E Exchange buffering
A Automatic record area buffering
R Record buffering.

RECFM(A, B, D, F, M, S, T, U, and/or V)
specifies the format and characteristics of the records in the data set. The format and characteristics must be completely described by one source only. If they are not available from any source, the default is an undefined-length record. For a discussion of the formats and characteristics of the RECFM subparameter of the DCB parameter, see *OS/390 MVS JCL Reference*.

Use the following values with the RECFM operand:

A indicates the record contains ASCII printer control characters.

B indicates the records are blocked.

D indicates variable-length ASCII records.

F indicates the records are of fixed-length.

M indicates the records contain machine code control characters.

S indicates, for fixed-length records, the records are written as standard blocks (there must be no truncated blocks or unfilled tracks except for the last block or track). For variable-length records, a record might span more than one block. Exchange buffering, BFTEK(E), must not be used.

T indicates the records can be written onto overflow tracks, if required. Exchange buffering, BFTEK(E), or chained scheduling, OPTCD(C), cannot be used.

U indicates the records are of undefined-length.

V indicates the records are of variable-length.

You can specify one or more values for this operand; at least one is required. If you use more than one value, you must separate each value with a comma or a space.

With SMS, the record format for a new data set might have been defined by the DATACLAS operand.

RECFM is mutually exclusive with RECORG.

DIAGNS(TRACE)
specifies the Open/Close/EOV trace option that gives a module-by-module trace of the Open/Close/EOV work area and your DCB.

LIMCT(*search_number***)**
specifies the number of blocks or tracks to be searched for a block or available space. The number must not exceed 32,760.

BUFOFF({*block_prefix_length* **| L})**
specifies the buffer offset. The block prefix length must not exceed 99. L specifies the block prefix field is four bytes long and contains the block length.

DSORG({DA | DAU | PO | POU | PS | PSU})
specifies the data set organization as follows:

DA Direct access
DAU Direct access unmovable
PO Partitioned organization
POU Partitioned organization unmovable
PS Physical sequential
PSU Physical sequential unmovable

When you allocate a new data set and you do not specify the DSORG operand, DSORG defaults to partitioned organization (PO) if you specify a non-zero value for the DIR operand. If you do not specify a value in the DIR operand, the system assumes you want a physical sequential (PS) data set. Note that the system does not store this default DSORG information into the data set until a program opens and writes to the data set. For more information about data set organization, see *OS/390 MVS Programming: Authorized Assembler Services Guide*.

DEN({0 | 1 | 2 | 3 | 4})
specifies the magnetic tape density as follows:

0 200 bpi/7 track
1 556 bpi/7 track
2 800 bpi/7 and 9 track
3 1600 bpi/9 track
4 6250 bpi/9 track (IBM 3420 Models 4, 6, and 8, or equivalent)

TRTCH({C | E | T | ET}, {COMP | NOCOMP})
specifies the recording technique for 7 track tape as follows:

C Data **c**onversion with odd parity (the default) and no translation (the default).

E **E**ven parity with no translation (the default) and no conversion (the default).

T Odd parity (the default) and no conversion (the default). BCD to EBCDIC **t**ranslation when reading and EBCDIC to BCD translation when writing.

ET **E**ven parity, and no conversion (the default). BCD to EBCDIC **t**ranslation when reading and EBCDIC to BCD translation when writing.

COMP | NOCOMP specifies whether data sets are to be compressed to save space.

This operand is mutually exclusive with KEYLEN.

KEYLEN(*bytes*)
specifies the length in bytes of each of the keys used to locate blocks of records in the data set when the data set resides on a direct access device. The key length must not exceed 255 bytes for a record organization of physical sequential (PS) or partitioned (PO).

If an existing data set has standard labels, you can omit this operand and let the system retrieve the key length from the standard label. If a key length is not supplied by any source before you issue an OPEN macro instruction, a length of zero (no keys) is assumed. This operand is mutually exclusive with TRTCH.

With SMS, the key length might have been defined by the DATACLAS operand. If you want to override it, explicitly specify KEYLEN. The number of bytes is as follows:

1 to 255 for a record organization of key-sequenced (RECORG(KS)).
0 to 255 for a record organization of physical sequential (PS) or partitioned (PO).

KEYOFF(*offset*)
with SMS, specifies the key position (offset) of the first byte of the key in each record. If you want to specify key offset or override the key offset defined in the data class (DATACLAS) of the data set, use KEYOFF. Specify KEYOFF only for a VSAM key-sequenced data set (RECORG(KS)).

Note: Without SMS, the system syntax checks and then ignores the KEYOFF operand.

RECORG({ES | KS | LS | RR})
with SMS, specifies the organization of the records in a new VSAM data set. If you want to override the record organization defined in the data class (DATACLAS) of the data set, use RECORG. The types that you can specify are:

ES specifies a VSAM entry-sequenced data set.

KS specifies a VSAM key-sequenced data set.
LS specifies a VSAM linear space data set.
RR specifies a VSAM relative record data set.

If you are using DATACLAS in place of RECORG, explicitly specify valid LRECL and KEYLEN values for a VSAM key-sequenced data set (RECORG(KS)).

If you do not specify RECORG, SMS assumes a physical sequential (PS) or partitioned (PO) data set.

RECORG is mutually exclusive with RECFM.

Note: Without SMS, the system syntax checks and then ignores the RECORG operand.

PROTECT
specifies the DASD data set or the first data set on a tape volume is to be RACF protected.

- For a new permanent DASD data set, the specified status must be NEW or MOD, treated as NEW, and the disposition must be either KEEP, CATALOG, or UNCATALOG. With SMS, SECMODEL overrides PROTECT.
- For a tape volume, the tape must have an SL, SUL, AL, AUL, or NSL label. The file sequence number and volume sequence number must be one (except for NSL), and PRIVATE must be assigned as the tape volume use attribute.

The PROTECT operand is not valid if a data set name is not specified or if the FCB operand or status other than NEW or MOD is specified.

COPIES((*number***)[,***group_value***])**
specifies the total number of copies of the data set to be printed, with an optional specification on the IBM 3800 printer as to how those copies can be grouped. Number is a required operand. The number of copies which can be requested is subject to an installation limit. You can specify up to 8 group values. For more information, see *OS/390 MVS JCL Reference*.

- Do not specify the COPIES operand with the DATASET operand.
- SYSOUT is the only valid data set status that you can specify with the COPIES operand.

BURST | NOBURST
specifies a request for the burster-trimmer-stacker on 3800 output. SYSOUT is the only valid data set status that you can specify with the BURST operand.

CHARS(*table_name***)**
specifies a request for name or names of character arrangement tables (fonts) for printing a data set with the 3800 printer. You can specify up to 4 table names. The choice of fonts available is determined by your installation at system generation time. SYSOUT is the only valid data set status that you can specify with the CHARS operand.

FLASH(*overlay_name***[,***copies***])**
specifies the name of a forms overlay, which can be used by the 3800 Printing Subsystem. The overlay is “flashed” on a form or other printed information over each page of output. The forms *overlay_name* must be 1 to 4 alphabetic, numeric, or special characters (#, $, or @). Optionally, you can specify the

number of *copies* on which the overlay is to be printed. The count can range from 0 to 255. To flash no copies, specify a count of zero. SYSOUT is the only valid data set status that you can specify with the FLASH operand.

MODIFY(*module_name***[,***trc***])**
specifies the name of a copy modification module, which is loaded into the 3800 Printing Subsystem. This module contains predefined data such as legends, column headers, or blanks, and specifies where and on which copies the data is to be printed. TSO/E defines and stores the module in SYS1.IMAGELIB. The *module_name* can contain 1 to 4 alphanumeric or special characters (#, $, or @).

MODIFY is used with FLASH so that individual pages can be tailored with the MODIFY operand from the basic form of pages created by the FLASH operand.

TRC corresponds to the character set(s) specified on CHARS (0-3). If TRC is not specified, a default character set is used. If TRC is used, CHARS must also be specified.

SYSOUT is the only valid data set status that you can specify with the MODIFY operand.

FCB(*image_id***[| VERIFY | ALIGN])**
specifies a forms control buffer (FCB) that is used to store vertical formatting information for printing, each position corresponding to a line on the form. The buffer determines the operations of the printer. It specifies the forms control image to be used to print an output data set on an IBM 3800 printer or 3211 printer. The FCB also specifies the data protection image to be used for the IBM 3525 card punch. The FCB operand is ignored for SYSOUT data sets on the 3525 card punch.

For further information on the forms control buffer, see *OS/390 MVS Programming: Authorized Assembler Services Guide*, *Programming Support for the IBM 3505 Card Reader and IBM 3525 Card Punch* or *IBM 3800 Printing Subsystem Programmer's Guide*.

image_id specifies 1-to-4 alphanumeric or special characters (#, $, or @) that identify the image to be loaded into the forms control buffer (FCB).

- For a 3211 printer, IBM provides two standard FCB images, STD1 and STD2. STD1 specifies that 6 lines per inch are to be printed on an 8.5 inch form. STD2 specifies that 6 lines per inch are to be printed on a 11 inch form.
- For a 3800 Printing Subsystem, IBM provides another standard FCB image, STD3, which specifies output of 80 lines per page at 8 lines per inch on 11 inch long paper.

STD1 and STD2 (standard FCB images) should not be used as image_ids for the SYSOUT data set unless established by your installation at system generation time.

If the image_id information is incorrectly coded, the default for the 3211 printer is the image currently in the buffer. If there is no image in the buffer, the operator is requested to specify an image. For the 3800 printer, the machine default is 6 lines per inch for any size form that is on the printer.

ALIGN specifies the operator should check the alignment of the printer forms before the data set is printed. The ALIGN subparameter is ignored for SYSOUT data sets and is not used by the 3800 printer.

VERIFY specifies the operator should verify that the image displayed on the printer is the desired one. The VERIFY subparameter is ignored for SYSOUT data sets.

FORMS(*forms_name***)**
specifies the name of the form on which the output from the SYSOUT data set is to be printed. Specify 1-to-4 alphanumeric or special characters (#, $, or @) for the forms name. SYSOUT is the only valid data set status that you can specify with the FORMS operand.

OUTDES(*output_descriptor_name***{,...})**
specifies a list of installation-defined output descriptors that were created by OUTPUT JCL statements in the LOGON procedure or by the TSO/E OUTDES command. Specifying the OUTDES operand eliminates the need to supply information related to the printer or the type of printing to be done.

You can specify up to 128 output descriptors associated with the SYSOUT data set. Specify 1-to-8 alphanumeric characters for the output descriptor name. The first character must be alphabetic or one of the special characters (#, $, or @). SYSOUT is the only valid data set status that you can specify with the OUTDES operand.

For information about how to create output descriptors using OUTPUT JCL statements in the LOGON procedure, see *OS/390 TSO/E Customization*. See "OUTDES Command" on page 1-210 for information about using the TSO/E OUTDES command to dynamically create output descriptors.

SPIN(UNALLOC | NO)
specifies when the system should make the SYSOUT data set available for printing.

UNALLOC specifies that the system should make the SYSOUT data set available for printing immediately after deallocation.

NO specifies that the system should make the SYSOUT data set available for printing at the end of the step.

If the SPIN keyword is not specified, ALLOCATE assumes SPIN=NO.

When the SPIN keyword is specified, you must also specify UNALLOC or NO. If you specify a parameter that is not UNALLOC or NO, or the parameter is missing, ALLOCATE will prompt you to specify the parameter.

The SPIN keyword specified on the FREE command overrides the SPIN keyword specified on the ALLOCATE command.

If the SEGMENT keyword is specified on the ALLOCATE command, the system prints the SYSOUT data set regardless of the SPIN specification on either the ALLOCATE command or FREE command.

SEGMENT(*page_count***)**
specifies the number of pages written to the SYSOUT data set before spinoff processing begins. SEGMENT can be a number, 1-99999. You can use SEGMENT to allow part of a job's output to be printed while the job is still running, or to allow multiple segments of a job's output to print simultaneously

on multiple printers. See *OS/390 MVS JCL Reference*, for more information on the SEGMENT keyword.

DSNTYPE(LIBRARY | PDS | HFS | PIPE)
specifies a new partitioned data set (PDS) or a new partitioned data set extended (PDSE). A PDSE is similar to a PDS; however, a PDSE can contain only data. A PDSE cannot contain load modules, and it must be an SMS-managed data set.

LIBRARY specifies a partitioned data set extended (PDSE). A PDSE can contain data-only members.

PDS specifies a partitioned data set (PDS). A PDS can contain data and load module members.

HFS specifies a hierarchical file system (HFS).

PIPE specifies a first-in first-out (FIFO) special file, which is also called a named pipe.

If you omit DSNTYPE, the type of data set is determined by other data set attributes, the data class for the data set, or an installation default.

When you specify DSNTYPE, you must also specify LIBRARY or PDS. If you specify another value or omit LIBRARY or PDS, ALLOCATE prompts you to specify the parameter.

If SMS is not installed or is not active, the system checks the DSNTYPE syntax and then ignores the parameter.

Before you define a PDSE, check with your storage administrator to ensure that SMS is able to manage the data set and assign the PDSE to a storage class.

UCS(*universal_character_set_name***)**
specifies the universal character set name or font name to be used when printing SYSOUT data sets. The UCS name can contain up to 4 alphanumeric characters. If you do not specify the CHARS operand, the system uses the UCS operand as the default. SYSOUT is the only valid data set status that you can specify with the UCS operand.

WRITER(*external_writer_name***)**
specifies a name for use in processing or selecting a SYSOUT data set. If you specify the external writer name, the system uses it instead of JES2 or JES3. The writer name can contain 1 to 8 alphanumeric or special characters #, $, or @. SYSOUT is the only valid data set status that you can specify with the WRITER operand.

PATH(*pathname***)**
identifies a hierarchical file system (HFS) file.

A pathname consists of the names of the directories from the root to the file being identified, and then the name of the file. The form is /name1/name2/.../name*n*.

A pathname begins with a slash (/). The system treats any consecutive slashes like a single slash. The pathname can be 2 to 250 characters, including the initial slash.

Consists of printable characters from `X'40'` to `X'FE'`. A filename can contain characters outside this range but these characters cannot be specified in the

JCL. Enclose the pathname in apostrophes if it contains a character other than:

```
Uppercase letters                Numbers
Special characters (#,$, or @)   Slash (/)
Asterisk (*)                     Plus (+)
Hyphen (-)                       Period (.)
Ampersand (&)
```

A pathname is case sensitive. Thus, '/usr/joe' and /usr/JOE define two different files.

If you specify either OCREAT alone, or OCREAT and OEXCL, on the PATHOPTS operand, and if the file does not exist, then MVS performs an `open()` function. The options from PATHOPTS, the pathname from the PATH operand, and the options from PATHMODE (if specified) are used in the `open()`. MVS uses the `close()` function to close the file before the application program receives control.

For status group options other than OCREAT and OEXCL, the description in this book assumes that the application passes the operands to the `open()` function without modification. That is, this application uses dynamic allocation information retrieval (the DYNALLOC macro) to retrieve the subparameters specified for PATHOPTS and passes the subparameters to the `open()` function. The application program can ignore or modify the information specified in the JCL or on the ALLOCATE command.

On the ALLOCATE command, you can code the following operands with the PATH operand: DSNTYPE, DUMMY, FILEDATA, PATHDISP, PATHMODE, PATHOPTS.

Note: The DFP OPEN macro is not supported for DD statements which specify the PATH keyword. Programs designed to use such DD statements must either:

- Use dynamic allocation information retrieval to obtain the information specified for PATH, PATHOPTS and PATHMODE, and pass it to the `open()` callable service. See *OS/390 UNIX System Services Programming: Assembler Callable Services Reference*, for details for using `open()`.
- Use the C/370 `fopen(//dd: )` function. `fopen()` handles the differences between DD statements with PATH and DSN specified. See *AD/Cycle C/370 Library Reference* for details on using `fopen()`.

PATHDISP(*normal_disposition***,***abnormal_disposition***)**
specifies the disposition of an HFS file upon normal and abnormal (conditional) TSO/E session termination.

normal_disposition
indicates the disposition of the HFS file upon normal TSO/E session termination. Valid values are:

KEEP specifies that the file should be kept.
DELETE specifies that the file should be deleted.

abnormal_disposition
indicates the disposition of the UNIX System Services file upon abnormal (conditional) TSO/E session termination. Valid values are:

KEEP specifies that the file should be kept.
DELETE specifies that the file should be deleted.

PATHMODE(*file_access_attribute***)**
specifies the file access attributes when the PATHOPTS operand also specifies OCREAT.

If you specify either OCREAT alone, or OCREAT and OEXCL, on the PATHOPTS operand, and if the file does not exist, then MVS performs an `open()` function. The options from PATHOPTS, the pathname from the PATH operand, and the options from PATHMODE (if specified) are used in the `open()`. MVS uses the `close()` function to close the file before the application program receives control.

For status group options other than OCREAT and OEXCL, the description in this book assumes that the application passes the operands to the `open()` function without modification. That is, this application uses dynamic allocation information retrieval (the DYNALLOC macro) to retrieve the subparameters specified for PATHOPTS and passes the subparameters to the `open()` function. The application program can ignore or modify the information specified in the JCL or on the ALLOCATE command.

You can specify up to 14 file access attributes; separate each with a comma. The system treats duplicate specifications as a single specification.

Subparameter Definition:

SIRUSR specifies permission for the file owner to read the file.

SIWUSR specifies permission for the file owner to write the file.

SIXUSR specifies permission for the file owner to search, if the file is a directory, or to execute, for any other file.

SIRWXU specifies permission for the file owner to read, write, and search, if the file is a directory, or to read, write, and execute, for any other file.

This value is the bit inclusive OR of SIRUSR, SIWUSR, and SIXUSR.

SIRGRP specifies permission for users in the file group class to read the file.

SIWGRP specifies permission for users in the file group class to write the file.

SIXGRP specifies permission for users in the file group class to search, if the file is a directory, or to execute, for any other file.

SIRWXG specifies permission for users in the file group class to read, write, and search, if the file is a directory, or to read, write, and execute, for any other file.

This value is the bit inclusive OR of SIRGRP, SIWGRP, and SIXGRP.

SIROTH specifies permission for the users in the file other class to read the file.

SIWOTH specifies permission for users in the file other class to write the file.

SIXOTH specifies permission for users in the file other class to search, if the file is a directory, or to execute, for any other file.

SIRWXO specifies permission for users in the file other class to read, write, and search, if the file is a directory, or to read, write, and execute, for any other file.

This value is the bit inclusive OR of SIROTH, SIWOTH, and SIXOTH.

SISUID specifies that the system set the user ID of the process to be the same as the user ID of the file owner when the file is run as a program.

SISGID specifies that the system set the group ID of the process to be the same as the group ID of the file owner when the file is run as a program. The group ID is taken from the directory in which the file resides.

When creating a new HFS file, if you do not code a PATHMODE operand on a DD statement with a PATH operand, the system sets the permissions to zero, which prevents access by all users. If the HFS file already exists, PATHMODE is checked for syntax but ignored. The permission bits are left as they are set.

PATHOPTS(*file_options***)**
specifies the file access and status used when accessing a file specified on the PATH operand. You can specify up to 7 file options; separate each with a comma. The system treats duplicate specifications as a single specification.

```
Access Group:        Status Group:
------------         ------------
(choose only 1)      (choose up to 6)
ORDONLY              OAPPEND
OWRONLY              OCREAT
ORDWR                OEXCL
                     ONOCTTY
                     ONONBLOCK
                     OTRUNC
```

Note: If you specify more than one Access Group, the system ignores them and uses ORDWR.

If you specify either OCREAT alone, or OCREAT and OEXCL, on the PATHOPTS operand, and if the file does not exist, then MVS performs an `open()` function. The options from PATHOPTS, the pathname from the PATH operand, and the options from PATHMODE (if specified) are used in the `open()`. MVS uses the `close()` function to close the file before the application program receives control.

For status group options other than OCREAT and OEXCL, the description in this book assumes that the application passes the operands to the `open()` function without modification. That is, this application uses dynamic allocation information retrieval (the DYNALLOC macro) to retrieve the subparameters specified for PATHOPTS and passes the subparameters to the `open()` function. The application program can ignore or modify the information specified in the JCL or on the ALLOCATE command.

Sub-parameter definition:

ORDONLY specifies this access group so that the program can open the file for reading.

OWRONLY specifies that the program can open the file for writing.

ORDWR specifies that the program can open the file for reading and writing. Do not use this option for a FIFO special file.

OAPPEND specifies that the system sets the file offset to the end of the file before each write, so that data is written at the end of the existing file.

OCREAT specifies that the system is to create the file. If the file already exists, the operation fails if OEXCL is specified, and opens the existing file if OEXCL is not specified.

OEXCL specifies that, if the file does not exist, the system is to create it. If the file already exists, `open()` fails. Note that the system ignores OEXCL if OCREAT is not also specified.

ONOCTTY specifies that, if the PATH operand identifies a terminal device, `open()` does not also make the terminal device the controlling terminal of the process and the session.

ONONBLOCK specifies the following, depending on the type of file:

- For a FIFO special file with ORDONLY option set:

  ONONBLOCK specifies read-only opening of the file. If ONONBLOCK is not specified, the read-only `open()` blocks until a process opens the file for writing.

- For a FIFO special file with OWRONLY option set:

  ONONBLOCK specifies that the system immediately process a request for a write-only `open()` of the file, if a process has already opened the file for reading. If the file is not open for reading, the system returns an error. If ONONBLOCK is not specified, the write-only `open()` blocks until a process opens the file for reading.

- For a character special file that supports a nonblocking `open()`:

  ONONBLOCK specifies that the system immediately returns if it cannot open a file because the device is not ready or available. If ONONBLOCK is not specified, the `open()` blocks until the device is ready or available.

  Specifications of ONONBLOCK has no effect on other file types.

OSYNC specifies that the system is to move data from buffer storage to permanent storage before returning control from a callable service that performs a write.

OTRUNC specifies that the system is to truncate the file to zero length if all of the following are true:

- The file specified on the PATH operand exists.
- The file is a regular file.
- The file successfully opened with ORDWR or OWRONLY.

The system does not change the mode and owner. OTRUNC has no effect on FIFO special files or directories.

FILEDATA(BINARY | TEXT)

controls the data conversion method, performed by the DFSMS/MVS Network File System server, when accessing MVS HFS files from workstations on a network. The FILEDATA operand on the ALLOCATE command does not

specify the type of data, but rather the conversion between EBCDIC and ASCII when exchanging the data between an MVS host and a client workstation.

BINARY specifies that data is to be processed as is, except possibly for conversion between record-oriented and byte-stream-oriented.

If you do not code the FILEDATA operand, the system assigns a default value of BINARY to the HFS file.

TEXT specifies that data is to be EBCDIC on MVS and ASCII on the workstation.

See the appropriate DFSMS/MVS publications for more details about the Network File System server and its conversion methods.

You need to code the PATH operand together with the FILEDATA operand.

You can code the FILEDATA operand together with the following ALLOCATE operands: BLKSIZE, BUFNO, DSNTYPE, DUMMY, LRECL, NCP, PATHDISP, PATHMODE, PATHOPTS, RECFM. If the `open()` callable service or the C/370 `fopen(//dd: )` function (as described under the PATH operand) is later used, the open fails.

RLS(NRI | CR)
specifies the level of record sharing, or *sharing protocol*, for a VSAM data set in a sysplex. See *DFSMS/MVS Using Data Sets*, for a description of sharing protocols and to determine whether your application can run in a sharing environment without modification.

NRI specifies no read integrity (NRI). An application can read uncommitted changes to a data set made by another application.

CR specifies consistent read (CR). An application can read only committed changes to a data set made by another application. An application might require changes if it attempts to read changes to a data set that was allocated with a specification of CR.

Do not use any of the following ALLOCATE operands with RLS: BURST, CHARS, COPIES, DDNAME, DSNTYPE, FLASH, MODIFY, OUTPUT, PATH, PATHOPTS, PATHMODE, PATHDISP, SEGMENT, SPIN, SYSOUT, UCS.

ALLOCATE Command Return Codes

Figure 1-3. ALLOCATE Command Return Codes

0	Allocation successful.
12	Allocation unsuccessful. An error message has been issued.

ALLOCATE Command Examples

Example 1

Operation: Allocate your terminal as a temporary input data set.

```
allocate da(*) file(ft01f001)
```

Example 2

Operation: Allocate an existing cataloged data set.

Known:

- The name of the data set: MOSER7.INPUT.DATA.

```
allocate da(input.data) old
```

Note that you do not have to specify the user ID, MOSER7, as an explicit qualifier.

Example 3

Operation: Allocate an existing data set that is not cataloged.

Known:

- The data set name: SYS1.PTIMAC.AM
- The volume serial number: B99RS2
- The ddname: SYSLIB

```
alloc dataset('sys1.ptimac.am') file(syslib) +
volume(b99rs2) shr
```

Example 4

Operation: Allocate a new data set with the attributes of an existing model data set.

Known:

- The name that you want to give the new data set: MOSER7.NEW.DATA
- The name of the model data set: MOSER7.MODEL.DATA

```
alloc da(new.data) like(model.data)
```

Example 5

Operation: Allocate a new data set that differs from an existing model data set only in its space allocation.

Known:

- The name that you want to give the new data set: MOSER7.NEW2.DATA
- The name of the model data set: MOSER7.MODEL.DATA
- The desired space attributes for the new data set: primary 10 tracks, secondary 5 tracks

```
alloc da(new2.data) space(10,5) tracks like(model.data)
```

Example 6

Operation: Allocate a new sequential data set with space allocated in tracks.

Known:

- The new data set name: MOSER7.EX1.DATA
- The number of tracks: 2
- The logical record length: 80
- The DCB block size: 8000
- The record format: fixed block

```
alloc da(ex1.data) dsorg(ps) space(2,0) tracks lrecl(80) +
blksize(8000) recfm(f,b) new
```

Example 7

Operation: Allocate a new partitioned data set with space allocated in blocks.

Known:

- The new data set name: MOSER7.EX2.DATA
- The block length: 200 bytes
- The logical record length: 100
- The DCB block size: 200
- The number of directory blocks: 2
- The record format: fixed block

```
alloc da(ex2.data) dsorg(po) block(200) space(10,10) +
lrecl(100) blksize(200) dir(2) recfm(f,b) new
```

Example 8

Operation: Allocate a new sequential data set with default space quantities.

Known:

- The new data set name: MOSER7.EX3.DATA
- The block length: 800 bytes
- The logical record length: 80
- The record format: fixed block

```
alloc da(ex3.data) block(800) lrecl(80) dsorg(ps) +
recfm(f,b) new
```

Example 9

Operation: Allocate a new sequential data set using an attribute list.

Known:

- The name that you want to give the new data set: MOSER7.EX4.DATA
- The number of tracks expected to be used: 10
- DCB operands are in an attribute list named: ATRLST1

```
attrib atrlst1 dsorg(ps) lrecl(80) blksize(3200)

alloc da(ex4.data) new space(10,2) tracks using(atrlst1)
```

Example 10

Operation: Allocate a new sequential data set with space allocated in blocks and using an attribute list.

Known:

- The new data set name: MOSER7.EX5.DATA
- The block length: 1000 bytes
- The DCB attributes taken from attribute list: ATRLST3

```
attrib atrlst3 dsorg(ps) lrecl(80) blksize(3200)

alloc da(ex5.data) using(atrlst3) block(1000) +
space(20,10) new
```

Example 11

Operation: Allocate a new sequential data set with default space quantities and using an attribute list.

Known:

- The new data set name: MOSER7.EX6.DATA
- The DCB attributes taken from attribute list: ATRLST5

```
attrib atrlst5 dsorg(ps) lrecl(80) blksize(3200)

alloc da(ex6.data) using(atrlst5) new
```

Example 12

Operation: Allocate a new data set to contain the output from a program.

Known:

- The data set name: MOSER7.OUT.DATA
- The ddname: OUTPUT
- You do not want to hold unused space.

```
alloc dataset(out.data) file(output) new space(10,2) +
tracks release
```

Example 13

Operation: Allocate an existing multi-volume data set to SYSDA, with one device mounted for each volume.

Known:

- The data set name: MOSER7.MULTIVOL.DATA
- Volumes: D95VL1, D95VL2, D95VL3
- The ddname: SYSLIB

```
alloc dataset('moser7.multivol.data') old parallel +
file(syslib) volume(d95vl1,d95vl2,d95vl3) +
unit(sysda)
```

Example 14

Operation: Allocate an existing data set as the second file of a standard-label tape.

Known:

- The data set name: MOSER7.TAPE1.DATA
- The volume: TAPEVL
- The unit: 2400

```
alloc dataset('moser7.tape1.data') label(sl) +
unit(2400) volume(tapevl) position(2)
```

Example 15

Operation: Allocate an output data set using the FCB and COPIES operands to request formatted copies of an output data set.

Known:

- The ddname: OUTPUT
- The FCB image desired: STD1

- The number of copies: 10

```
alloc file(output) sysout fcb(std1) copies(10)
```

Example 16

Operation: Allocate a new tape data set using the PROTECT operand to request RACF protection.

Known:

- The data set name: MOSER7.TAPE2.DATA
- The volume: TAPEV2
- The unit: 2400

```
alloc da(tape2.data) unit(2400) label(sl) position(1) +
volume(tapev2) protect new
```

Example 17

Operation: Allocate a new DASD data set using the PROTECT operand to request RACF protection.

Known:

- The data set name: MOSER7.DISK.DATA
- The logical record length: 80
- The DCB block size: 8000
- The record format: fixed block
- The number of tracks: 2

```
alloc da(disk.data) dsorg(ps) space(2,0) tracks +
lrecl(80) blksize(8000) recfm(f,b) protect new
```

Example 18

Operation: Concatenate some data sets.

Known:

- The data set names: A.CLIST, B.CLIST, C.CLIST
- The ddname: SYSPROC

```
alloc file(sysproc) dataset(a.clist,b.clist,c.clist) +
shr reuse
```

You cannot directly add another data set to a concatenation. There are two ways to add another data set to a data set concatenation:

1. Use the FREE command to deallocate or free the data sets in the concatenation. Then reallocate the entire concatenation, including the data set to be added, using the ALLOCATE command.
2. Specify the REUSE operand with the ALLOCATE command when you concatenate. The REUSE operand specifies the file name being allocated is to be freed and reallocated if it is currently in use.

Example 19

Operation: Allocate a data set, defined by a DD statement, as a SYSOUT data set with output descriptors to be printed on a specific print form.

Known:

- The ddname: PAYROLL
- The output descriptor: PRINTER1
- The print form name: CHEK

```
alloc f(payroll) sysout forms(chek) outdes(printer1)
```

Example 20

Operation: Allocate a SYSOUT data set specifying the member name of an installation-written program that is to write the data set.

Known:

- The ddname: REPORTA
- The writer name: OURWRIT
- The output descriptor: DESCRIPT

```
alloc f(reporta) sysout writer(ourwrit) outdes(descript)
```

Example 21

Operation: Allocate a SYSOUT data set to be printed in a specific character set or print font.

Known:

- The ddname: REPORTB
- The character set: GOTH
- The output descriptor: DESCRIPT

```
alloc f(reportb) sysout ucs(goth) outdes(descript)
```

Example 22

Operation: Allocate a SYSOUT data set to make it available for printing immediately after deallocation.

Known:

- The name of the file: SYSPRINT

```
alloc f(sysprint) sysout spin(unalloc)
```

Example 23

Operation: Allocate a SYSOUT data set specifying the number of pages to print.

Known:

- The name of the file: SYSPRINT
- Desired segment size: 500

```
alloc f(sysprint) sysout da(*) segment(500)
```

Example 24

Operation: Allocate a SYSOUT data set to be routed to a user at a remote destination.

Known:

- The ddname: FREEDOM
- The destination: NEWYORK
- The user ID: LIBERTY

```
alloc f(freedom) sysout dest(newyork.liberty)
```

Example 25

The following example assumes that the Storage Management Subsystem (SMS) is installed and is active.

Operation: Allocate an OBJECT PDS with a data class of OBJ.

Known:

- The data set name: SMS.PDS.OBJ
- The data class: OBJ
- The storage class: STANDARD
- The management class: TSO
- The data class attributes: LRECL (80), RECFM (FB), primary quantity (10), secondary quantity (10), directory blocks (5), AVGSIZE (800)

```
alloc da('sms.pds.obj') new dataclas(obj) storclas(standard)+
mgmtclas(tso)
```

Example 26

The following example assumes that SMS is installed and is active.

Operation: Override the data class, storage class, management class operands by explicitly specifying them on the ALLOCATE command.

Known:

- The data set name: SMS.NEW.OBJ
- The data class attributes: LRECL (80), RECFM (FB), primary quantity (10), secondary quantity (10), directory blocks (5), AVGREC (U), AVGSIZE (6160)

```
alloc da('sms.new.obj') dataclas(pds) storclas(general) +
mgmtclas(temp) new
```

Example 27

Operation: Allocate three data sets using the REUSE operand. Two data sets are used for the allocation example. Both data sets have the same name but are on different volumes.

Known:

- Data set name: MY.DATA.SET
- MY.DATA.SET on volume STOR03 is cataloged
- MY.DATA.SET on volume STOR99 is uncataloged

1. Allocate MY.DATA.SET on volume STOR03:

   ```
   alloc file(x) da(my.data.set') reuse shr
   ```

2. Allocate MY.DATA.SET on volume STOR99. The REUSE operand frees the *file x* allocation for MY.DATA.SET on volume STOR03 and reallocates file *x* to MY.DATA.SET on volume STOR99.

   ```
   alloc file(x) da('my.data.set') reuse shr vol(stor99)
   ```

3. Allocate MY.DATA.SET on volume STOR99:

   ```
   alloc file(x) da('my.data.set') reuse shr
   ```

This is satisfied by the current allocation which is MY.DATA.SET on volume STOR99.

Note: REUSE does not free *file x* and then reallocate *file x* with MY.DATA.SET on volume STOR03 because it is satisfied by an existing allocation.

If you wish to allocate MY.DATA.SET on volume STOR03, you can either free `file x` and then issue the same allocate command or specify volume STOR03 on the allocation.

Example 28

The following example assumes that Storage Management Subsystem is installed and active.

Operation: Allocate a new DASD data set using a system-determined block size and request space in a quantity of logical records.

Release overallocated space down to a track boundary when the data set is closed.

Known:

- The data set name: K9345P.REPORT2
- The logical record length: 133
- The record format: Fixed block ANSI
- The number of logical records: Primary quantity 5000, secondary quantity 500

```
alloc ds('k9345p.report2') new dsorg(ps) recfm(f,b,a) +
lrecl(133) avblock(133) avgrec(u) space(5000,500) release
```

Example 29

Operation: Allocate an output file, creating it if it does not exist.

Known:

- The ddname: OUTPUT
- The pathname: **/u/userid/file.dbp**
- The disposition: Keep under all circumstances.
- Permissions: Read, write, and execute for the user; no other permissions.

```
alloc path('/u/userid/file.dbp')    +
      pathdisp(keep,keep)           +
      pathopts(owronly,ocreat)      +
      pathmode(sirwxu)              +
      file(output)
```

ALTLIB Command

Use the ALTLIB command to:

- Define alternative application-level libraries of REXX execs or CLISTs.
- Indicate that user-, application-, and system-level libraries of REXX execs and CLISTs are being searched.
- Exclude one or more library levels (user, application, system) from being searched.
- Reset the search order to the system level.
- Obtain a display of the search order that is in effect.

TSO/E searches the user-, application-, and system-level libraries for REXX execs or CLISTs that are executed implicitly or when searching for REXX external functions or subroutines. For more information about implicitly executing execs and CLISTs, see “EXEC Command” on page 1-142. For more information about REXX external functions, see *OS/390 TSO/E REXX Reference*.

Search Order for Libraries

The following table lists the search order of the user-, application-, and system-level libraries. Also shown are the ddnames associated with each library level. These ddnames can be allocated either dynamically by the ALLOCATE command or included as part of a logon procedure.

Figure 1-4. Library Search Order

Search order	Library level		Associated ddname
1.	User	REXX exec	SYSEXEC
2.	User	CLIST	SYSUPROC
3.	Application	REXX exec	Define with FILE or DATASET operand
4.	Application	CLIST	Define with FILE or DATASET operand
5.	System	REXX exec	SYSEXEC (installation can define this ddname)
6.	System	CLIST	SYSPROC

With the defaults that TSO/E provides, and before an ALTLIB command is invoked, TSO/E searches the system EXEC library (default ddname SYSEXEC) first, followed by the system CLIST library (ddname SYSPROC). Note that your system programmer can change this by

- Defining an alternate ddname of SYSEXEC
- Indicating that TSO/E is not to search the system-level exec ddname of SYSEXEC. Then only the system-level CLIST (SYSPROC) is searched.

You can alter the default library search order by using either the ALTLIB command or the EXECUTIL command.

Use EXECUTIL to indicate that the system-level exec ddname is to be searched for the duration of the current REXX language processor environment.

Use ALTLIB to indicate that the system-level exec ddname is to be searched for the duration of the current application. ALTLIB always overrides EXECUTIL within an application.

Use ALTLIB DISPLAY to see which libraries are being searched for.

Using ALTLIB with Most Applications

With most applications, the ALTLIB command is in effect from the time that the command is entered until either another ALTLIB command is entered or the TSO/E session is ended.

Examples of applications where the ALTLIB command remains in effect for the duration of the session include TSO/E line mode, TMP READY mode, and TSO/E commands that accept subcommands, such as IPCS. This does not, however, apply to ISPF, ISPF dialogs, and similar programs.

Using ALTLIB with Concurrent Applications

TSO/E permits applications that allow users to perform multiple tasks to distinguish between the set of procedure libraries required to support one task and the set of procedure libraries required to support a different task.

For example, a user can edit a memo using the ISPF/PDF editor from one logical screen and interleave that task with the browsing of a dump using the IPCS dialog from a different logical screen.

Using ALTLIB in ISPF

When you use ALTLIB when ISPF is active, you can define the libraries (user, application, and system) that are active for each application. Libraries that you define while running an application are in effect only while that application has control. When the application completes, the previous libraries (user, application, and system) are automatically reactivated.

If you are in split-screen mode in ISPF and you issue the ALTLIB command from a one-screen session, the changes affect only that screen session. The ALTLIB search order is not valid across split screens.

The libraries that are originally used when an application gets control are determined through the NEWAPPL and PASSLIB parameters on the ISPF SELECT service. For more information about the SELECT service, see *OS/390 ISPF Services Guide*.

When NEWAPPL is specified and PASSLIB is not specified (that is, you want to isolate the selected function from the application currently in control, but you do not want to pass library definitions specified with the ALTLIB command and ISPF LIBDEF service on to the new application), the current set of libraries, if any exist, are not used by the application being selected. The deactivation of these libraries takes place BEFORE the application is selected. The current library definitions are automatically reactivated when the application being selected terminates.

When both NEWAPPL and PASSLIB are specified (that is, you want to isolate the selected function from the application currently in control and you want to pass library definitions specified with the ALTLIB command and ISPF LIBDEF service on to the new application), the current set of libraries, if any exist, are made available

to the selected application. Any changes you make to this set of libraries while this application is running are in effect only while this application has control. After the selected application terminates, the original set of libraries is reactivated.

When NEWAPPL and PASSLIB are not specified (that is, you do not want to isolate the selected function), the current set of libraries remains in effect because the selected function does not represent a new application. If the selected function changes any of the library definitions, the changes apply through all select levels of the application of which the selected function is a part.

ALTLIB within line mode TSO/E works just like an ISPF application. However, if you use ALTLIB from within line mode TSO/E and start ISPF, the libraries you specified in line mode TSO/E will not be available until ISPF is terminated.

Using ALTLIB in the IPCS Dialog

When you activate the IPCS dialog for a logical screen, the IPCS dialog establishes an ALTLIB environment with the same search order that is in effect before the first ALTLIB command is invoked. See “Search Order for Libraries” on page 1-59 for the order in which TSO/E searches the libraries. This environment is used solely for IPCS dialog processing for the logical screen.

Although the initial environments are similar, the IPCS environment maintains a separate ALTLIB environment from that of ISPF. IPCS controls separate ALTLIB environments for each ISPF logical screen in which the IPCS is invoked.

When you direct commands to the IPCS dialog, the EXEC command uses the ALTLIB environment associated with the ISPF logical screen in which the IPCS dialog is invoked. When you direct the ALTLIB command to the IPCS dialog, defining or excluding one or more libraries, only the ALTLIB environment associated with that IPCS dialog for that logical screen will change.

When you direct commands to ISPF within the IPCS dialog, the EXEC command uses the ALTLIB environment associated with the particular ISPF application that IPCS is running. When you direct the ALTLIB command to ISPF, only the ALTLIB environment associated with that ISPF application will change.

Only the IPCS dialog maintains a separate ALTLIB environment. Native IPCS does not maintain a separate ALTLIB environment.

Note: Do not use the QUIET option of ALTLIB in the IPCS dialog. IPCS does not make ISPF services available to TSO/E commands that IPCS invokes.

For more information about using the ALTLIB command when the IPCS dialog is active, refer to *OS/390 MVS IPCS User's Guide*, and *OS/390 MVS IPCS Commands*.

Stacking Application-Level Library Requests

Application-level REXX exec and CLIST requests can be stacked up to eight requests each. Because the application-level requests are stacked, you can activate a REXX exec or CLIST and then reissue the request for the same REXX exec or CLIST and the first request will still exist. When you stack application-level library requests for REXX execs or CLISTs, the last application level you activate becomes the current one. Only the top, or current application-level request is active.

For example, if you activate an application-level CLIST,

```
altlib activate application(clist) dataset('userid.ds1')
```

and then unconditionally activate another application-level CLIST,

```
altlib activate application(clist) dataset('otherid.ds5') uncond
```

the second request becomes current and the first request is stacked under it.

If you entered the command, ALTLIB DISPLAY, to display the search order, the display at your terminal would look similar to the following:

```
IKJ79322I   Current search order (by DDNAME) is:
IKJ79326I               Application-level CLIST DDNAME=SYS00027
IKJ79321I                             Stacked   DDNAME=SYS00026
IKJ79327I               System-level EXEC       DDNAME=SYSEXEC
IKJ79328I               System-level CLIST      DDNAME=SYSPROC
```

Deactivate the application-level for CLIST to remove the second request and make the first request current. Or, you can clear all requests and reset the original library search order. For example, to clear only the current request issue:

```
altlib deactivate application(clist)
```

To clear all stacked application-level requests and leave the user and system levels as they are, issue:

```
altlib deactivate application(*)
```

ALTLIB Command Syntax

```
►►─ALTLIB─┬─┬─ACTIVATE─┬─┬─┬─Application─┬─┬──────────────────────────►
          │ │└─ACT─────┘ │ │└─USER───┬─(─┬─*─────┬─)─┬─┘
          │ │            │ │  SYSTEM─┘   │ EXEC   │   │
          │ │            │ │             └─CLIST──┘   │
          │ ├─DEACTIVATE─┤ │
          │ │└─DEACT─────┘ │ │┌─APPLICATION─┐
          │ │              │ ├─┤─USER────────┤─(─┬─*─────┬─)─┤
          │ │              │ │└─SYSTEM─────┘   │ EXEC   │   │
          │ │              │ │                 └─CLIST──┘   │
          │ │              │ └─ALL──────────────────────────┘
          │ ├─DISPLAY──────┤
          │ │ ├─DISP───────┤
          │ │ └─DIS────────┘
          │ ├─RESET────────┤
          │ │└─RES─────────┘
          │
►─┬─QUIT─┘──────────────────────────────────────────────────────►◄
  │
```

Application:

```
├─APPLICATION(─┬─EXEC──┬─)─┬─┬─Dataset─┬─┬─┬─UNCOND─┬─┤
              │ └─CLIST─┘   │ │ File    │ │ └─COND───┘
              │             └─┘         └─┘
```

Dataset:

```
├─┬─DATASET─┬─(─┬─dsname─┬─)─┤
  │ └─DSNAME─┘   └────────┘
```

File:

```
├─┬─FILE────┬─(ddname)─┤
  │ ├─DDNAME─┤
  │ └─LIBRARY┘
```

ALTLIB Command Operands

ACTIVATE | ACT
indicates that you want to include the specified library level when searching for a REXX exec or CLIST.

DEACTIVATE | DEACT | DEA
indicates that you want to exclude the specified library level when searching for a REXX exec or CLIST.

DISPLAY | DISP | DIS
requests information about the search order the EXEC command processor currently uses to find a REXX exec or CLIST.

RESET | RES
resets the libraries searched to system-level REXX execs and CLISTs only.

USER
indicates that the user-level REXX execs and CLISTs are to be activated or deactivated. User-level REXX execs and CLISTs are those data sets concatenated to the ddname SYSUPROC for both CLISTs and REXX execs and the data sets concatenated to ddname SYSUEXEC for REXX execs only.

APPLICATION
indicates that the application-level REXX execs and CLISTs are to be activated or deactivated. Application-level execs and CLISTs are those data sets defined with the DATASET or FILE operands.

SYSTEM
indicates that the system-level REXX execs and CLISTs are to be activated or deactivated. System-level execs and CLISTs are the data sets that are concatenated to the ddname SYSPROC for both REXX execs and CLISTs or those data sets that are concatenated to the ddname SYSEXEC for REXX execs only.

ALL
indicates that you want to deactivate all library levels, user, application, and system, of REXX execs and CLISTs.

(EXEC)
indicates that you want to activate or deactivate REXX execs at the level you specify (user, application, or system).

(CLIST)
indicates that you want to activate or deactivate CLISTs at the level that you specify (user, application, or system).

(*) indicates that you want to activate or deactivate REXX execs and CLISTs at the level you specify (user, application, or system).

DATASET(*dsname*) | DSNAME(*dsname*)
specifies a data set list to define an application-level library of REXX execs or CLISTs. When specifying DATASET or DSNAME:

- The data sets must be cataloged partitioned data sets when you issue the ALTLIB command.
- The maximum number of data sets you can list is fifteen. Use the FILE operand if you want to specify more than fifteen.
- The data sets must all have the same record format (RECFM).
- If the data sets have different block sizes, you can specify them in any order of block sizes.
- Member names cannot be specified in the list of data sets.

FILE(*ddname*) | DDNAME(*ddname*) | LIBRARY(*ddname*)
specifies a ddname that defines an application-level library.

- The ddname must be allocated before issuing the ALTLIB command.
- The ddname must be allocated with the permanently allocated attribute to ensure that the system does not automatically deallocate the ddname when the allocation control limit is exceeded. Note that the ALLOCATE command and data sets allocated in a LOGON procedure are automatically allocated with this attribute, however, if you access dynamic allocation directly, using SVC 99, you need to specify this attribute. For more information about the permanently allocated attribute, see *OS/390 MVS Programming: Authorized Assembler Services Guide*.
- To avoid errors when the EXEC command runs, specify only cataloged partitioned data sets.

<u>UNCOND</u> | COND

UNCOND activates the specified application-level library even if another application-level library of the same type, CLIST or REXX exec, is active within the current application. Up to eight application-level CLIST and REXX exec requests can be stacked. (See Stacking Application-Level Library Requests for an explanation of stacking.)

COND activates the specified application-level library only if another application-level library of the same type, CLIST or REXX exec, is *not* active within the current application. If you issue the ALTLIB command with the COND keyword and there is already an application-level library in effect, a message is displayed and a non-zero return code is set.

QUIET

indicates that you want messages saved and not displayed at the terminal. Messages can be saved in the ISPF shared pool when QUIET is used and ISPF is active. Variable IKJADM1 contains the first message, variable IKJADM2 contains the second message, and so on. Variable IKJADM contains the number of messages returned for the invocation of ALTLIB according to these rules:

- If you specify ALTLIB with QUIET, IKJADM is reset to the number of messages returned for that invocation of ALTLIB.
- If you do not specify the QUIET operand, IKJADM is not reset. It equals the number of messages returned for the last invocation of ALTLIB with QUIET.
- QUIET takes effect after TSO/E determines that the ALTLIB command is syntactically correct. If the command is not syntactically correct, then IKJADM equals 0 and a return code of 20 is returned indicating a syntax error.

QUIET saves up to 99 messages.

IKJADM1 echoes the command entered in IKJADM1. For example,

```
IKJADM = 4
IKJADM1= ALTLIB DISPLAY QUIET
IKJADM2= IKJ79322I Current search order (by DDNAME) is:
IKJADM3= IKJ79327I System-level EXEC       DDNAME=SYSEXEC
IKJADM4= IKJ79328I System-level CLIST      DDNAME=SYSPROC
```

REXX execs and CLISTs may use the variables IKJADM and IKJADM1 - IKJADM99 as in this example:

```
/* REXX */
ADDRESS TSO "ALTLIB DISPLAY QUIET"
ADDRESS ISPEXEC "VGET (IKJADM IKJADM1 IKJADM2 IKJADM3 IKJADM4) SHARED"
SAY 'IKJADM ='IKJADM
SAY 'IKJADM1='IKJADM1
SAY 'IKJADM2='IKJADM2
SAY 'IKJADM3='IKJADM3
SAY 'IKJADM4='IKJADM4
```

If you use a program that invokes ALTLIB with the QUIET operand, you must take the following into consideration: ALTLIB declares IKJADM as a fixed binary integer, four bytes long. IKJADM1 - 99 are character format, 251 bytes long. If QUIET is in effect and you invoke ALTLIB from a program, messages are not displayed, but they are available to the program.

Note: Do not use the QUIET option of ALTLIB in the IPCS dialog. IPCS does not make ISPF services available to TSO/E commands that IPCS invokes.

ALTLIB Command Return Codes

Figure 1-5. ALTLIB Command Return Codes

0	Processing successful. Informational messages might have been issued.
4	An alternative library does not exist for this type (REXX exec or CLIST); none deactivated.
8	An application-level library already exists for this type (REXX exec or CLIST). The new application-level library was not activated. Issued only when you specify the COND parameter.
10	User- or system-level CLIST activated; User- or system-level exec cannot be activated because a REXX language processor environment has not been established. Contact your system programmer to diagnose problems with TSO/E programs IRXECUSP and IRXINIT.
16	A required ddname was not previously allocated.
20	Severe error. More information is contained in messages.

ALTLIB Command Examples

Example 1

Operation: Search for CLISTs in a user-level library before application- or system-level libraries. First allocate a user-level ddname, then activate the user-level CLISTs.

```
allocate fi(sysuproc) da('id.clist') shr reu

altlib activate user(clist)
```

Example 2

Operation: Display the search order currently used to find a REXX exec or CLIST.

```
altlib display
```

The output at your terminal might be similar to the following:

```
IKJ79322I  Current search order (by DDNAME) is:
IKJ79327I      System-level EXEC             DDNAME=SYSEXEC
IKJ79328I      System-level CLIST            DDNAME=SYSPROC
```

Example 3

Operation: Define an application-level CLIST library even if another application-level CLIST library exists, and request that messages are not to be displayed.

```
altlib activate application(clist) dataset(clist.name) uncond quiet
```

ATTRIB Command

Use the ATTRIB command to build a list of attributes for non-VSAM data sets that you intend to allocate dynamically. During the remainder of your terminal session, you can have the system refer to this list for data set attributes when you enter the ALLOCATE command. The ALLOCATE command converts the attributes into DCB operands and LABEL operands for data sets being allocated. Refer to the subparameters of the DCB parameter in *OS/390 MVS JCL Reference*.

The ATTRIB command allocates a file with the same name as your *attr_list_name*. You can use the LISTALC command with the STATUS operand to list your active attribute lists. The data set name is NULLFILE, which is also the data set name for files allocated with the DUMMY operand of the ALLOCATE command. Because this is a NULLFILE allocation, it is subject to use and modification by other commands. Therefore, it is advisable to allocate those data sets for which the attribute list was built before you issue any commands that might cause NULLFILE allocation, such as LINK or RUN.

With the LIKE operand and the DCB operands on the ALLOCATE command, you do not have to use the ATTRIB command.

ATTRIB Command Syntax

```
►►─┬─ATTRIB─┬─attr_list_name──────────────────────────────────────►
   └─ATTR───┘                 └─BLKSIZE(blocksize)─┘

►──┬─BUFL(buffer_length)─┘  └─BUFNO(number_of_buffers)─┘

►──┬─LRECL(──┬─logical_record_length─┬─)─┘
          ├─x──────────────────────┤
          └─nnnnnK─────────────────┘

►──┬─NCP(no._of_channel_programs)─┘  ┬─INPUT──┬
                                   └─OUTPUT─┘

►──┬─EXPDT(year_day)──────┬  └─BFALN(──┬─F─┬─)─┘  ┬─OPTCD(──┬─A──┬──)─┘
   └─RETPD(no._of_days)───┘            └─D─┘        │      ┌─,──┐
                                                    │      ▼    │
                                                    │      ├─B──┤
                                                    │      ├─C──┤
                                                    │      ├─E──┤
                                                    │      ├─F──┤
                                                    │      ├─H──┤
                                                    │      ├─J──┤
                                                    │      ├─Q──┤
                                                    │      ├─R──┤
                                                    │      ├─T──┤
                                                    │      ├─W──┤
                                                    │      └─Z──┘

►──┬─EROPT(──┬─ACC─┬─)─┘  └─BFTEK(──┬─S─┬─)─┘  ┬─RECFM(──┬─A──┬──)─┘
        ├─SKP─┤            ├─E─┤        │      ┌─,──┐
        └─ABE─┘            ├─A─┤        │      ▼    │
                           └─R─┘        │      ├─B──┤
                                        │      ├─D──┤
                                        │      ├─F──┤
                                        │      ├─M──┤
                                        │      ├─S──┤
                                        │      ├─T──┤
                                        │      ├─U──┤
                                        │      └─V──┘

►──┬─DIAGNS(TRACE)─┘  └─LIMCT(search_number)─┘

►──┬─BUFOFF(──┬─block_prefix_length─┬─)─┘  └─DSORG(──┬─DA───┬─)─┘
         └─L──────────────────┘                ├─DAU──┤
                                               ├─PO───┤
                                               ├─POU──┤
                                               ├─PS───┤
                                               └─PSU──┘

►──┬─DEN(──┬─0─┬─)─┘  ┬──────────────────────────────────────────┬──►◄
      ├─1─┤            │                          ┌─NOCOMP─┐      │
      ├─2─┤            ├─TRTCH(──┬─C─┬──────────┬─────────┬─)──┤
      ├─3─┤            │          ├─E─┤          └─COMP───┘      │
      └─4─┘            │          ├─T─┤                          │
                       │          └─ET─┘                          │
                       └─KEYLEN(key_length)──────────────────────┘
```

ATTRIB Command Operands

attr_list_name
specifies the name for the attribute list. You can specify this name later as an operand of the ALLOCATE command. The name must consist of 1 to 8 alphanumeric and/or special characters (#, $, or @), must begin with an alphabetic or special character, and must be different from all other attribute list names and ddnames that exist during your terminal session.

BLKSIZE(*blocksize***)**
specifies the block size for the data sets. The block size must be a decimal number and must not exceed 32760 bytes.

The block size you specify must be consistent with the requirements of the RECFM operand. If you specify:

- RECFM(F), then the block size must be equal to or greater than the logical record length.
- RECFM(F B), then the block size must be an integral multiple of the logical record length.
- RECFM(V), then the block size must be equal to or greater than the largest block in the data set. For unblocked variable-length records, the size of the largest block must allow space for the four-byte block descriptor word in addition to the largest logical record length. The logical record length must allow space for a four-byte record descriptor word.
- RECFM(V B), then the block size must be equal to or greater than the largest block in the data set. For block variable-length records, the size of the largest block must allow space for the four-byte block descriptor word in addition to the sum of the logical record lengths that will go into the block. Each logical record length must allow space for a four-byte record descriptor word. Because the number of logical records can vary, you must estimate the optimum block size and the average number of records for each block based on your knowledge of the application that requires the I/O.
- RECFM(U), then the block size can be any value up to what is supported by the device or 32760, whichever is smaller. If allocated to a TSO/E terminal and BLKSIZE(80) is coded, then one character (the last byte) is reserved for an attribute character.

BUFL(*buffer_length***)**
specifies the length, in bytes, of each buffer in the buffer pool. Specify a decimal number for buffer_length. The number must not exceed 32760.

If you omit this operand and the system acquires buffers automatically, the BLKSIZE and KEYLEN operands are used to supply the information needed to establish buffer length.

BUFNO(*number_of_buffers***)**
specifies the number of buffers to be assigned for data control blocks. Specify a decimal number for number_of_buffers. The number must not exceed 255. You might be limited to a smaller number of buffers depending on the limit established at your installation. The following table shows the condition that requires you to include this operand.

When you use one of the following methods of obtaining the buffer pool, then:

(1) BUILD macro instruction	(1) You must specify BUFNO.
(2) GETPOOL macro instruction	(2) The system uses the number that you specify for GETPOOL.
(3) Automatically with BPAM or BSAM	(3) You must specify BUFNO if the program was designed to use buffers obtained during OPEN.
(4) Automatically with QSAM	(4) You may omit BUFNO and accept the system default, which is five or one, except with an extended format data set. For more information see *DFSMS/MVS Using Data Sets*.

LRECL(*logical_record_length***)**
specifies the length, in bytes, of the largest logical record in the data set. You must specify this operand for data sets that consist of either fixed-length or variable-length records.

If the data set contains undefined-length records, omit this operand.

The logical record length must be consistent with the requirements of the RECFM operand and must not exceed the block size (BLKSIZE operand), except for variable-length-spanned records. If you specify:

- RECFM(V) or RECFM(V B), then the logical record length is the sum of the length of the actual data fields plus four bytes for a record descriptor word.
- RECFM(F) or RECFM(F B), then the logical record length is the length of the actual data fields.
- RECFM(U), then you should omit the LRECL operand.

LRECL(NNNNNK) allows users of ISO/ ANSI extended logical records and QSAM locate mode users to specify a K multiplier on the LRECL operand. NNNNN can be within 1-16,384. The K indicates that the value can be multiplied by 1024.

For variable-length spanned records (VS or VBS) processed by QSAM (locate mode) or BSAM, specify LRECL (X) when the logical record exceeds 32756 bytes.

NCP(*number_of_channel_programs***)**
specifies the maximum number of READ or WRITE macro instructions allowed before a CHECK macro instruction is issued. The maximum number must not exceed 255 and must be less than 255 if the address space does not have enough virtual storage. If you wish to use chained scheduling, you must specify an NCP value greater than 1. If you omit the NCP operand and the application program does not specify the MULTSDN parameter on the DCBE macro, the default value is 1. Note that the MULTSDN has nor effect while running DFSMS/MVS on earlier releases than release 1.

INPUT | OUTPUT

INPUT specifies a BSAM data set opened for INOUT or a BDAM data set opened for UPDAT is to be processed for input only. This operand overrides the INOUT (BSAM) option or UPDAT (BDAM) option in the OPEN macro instruction to INPUT. This is useful if you only have READ access authority to the data set.

OUTPUT specifies a BSAM data set opened for OUTIN or OUTINX is to be processed for output only. This operand overrides the OUTIN option in the OPEN macro instruction to OUTPUT or the OUTINX option in the OPEN macro instruction to EXTEND.

EXPDT(*year_day*)
specifies the data set expiration date. Specify the year and day in one of two forms:

1. yyddd, where yy is the last two-digit number for the year and ddd is the three-digit number for the day of the year. The maximum value for the year is 99 (for 1999). The minimum value for the day is 000 and the maximum value is 366.

   If you specify 99365 or 99366, the system retains your data sets permanently. Do not use those dates as an expiration date. Use them as "no scratch" dates only.

2. yyyy/ddd, where yyyy is the four-digit number for the year and ddd is the three-digit number for the day of the year. The slash is required. The maximum value for the year is 2155. The minimum value for the day is 000 and the maximum value is 366.

If you specify 1999/365 or 1999/366, the system retains your data sets permanently. Do not use those dates as an expiration date. Use them as "no scratch" dates only. If you code any of these special values after 1999, they will have the same effect.

If SMS is active, the expiration date might have been defined by the DATACLAS operand.

RETPD(*number_of_days*)
specifies the data set retention period in days. The value can be a one- to four-digit decimal number. If the system calculates the date as the equivalent of 1999/365 or 1999/366, the system does not use that date. Instead it uses 2000/001.

BFALN({F | D})
specifies the boundary alignment of each buffer as follows:

D Each buffer starts on a doubleword boundary.

F Each buffer starts on a fullword boundary that might not be a doubleword boundary.

If you do not specify this operand and it is not available from any other source, then data management routines assign a doubleword boundary.

OPTCD(A, B, C, E, F, H, J, Q, R, T, W and/or Z)
specifies the following optional services that you want the system to perform. See the OPTCD subparameter of the DCB parameter in *OS/390 MVS JCL Reference*.

A specifies actual device addresses be presented in READ and WRITE macro instructions.

B specifies the end-of-file (EOF) recognition be disregarded for tapes.

C specifies the use of chained scheduling.

E requests an extended search for block or available space.

F specifies feedback from a READ or WRITE macro instruction should return the device address in the form it is presented to the control program.

H requests the system to check for and bypass.

J specifies the character after the carriage control character is the table reference character for that line. The table reference character tells TSO/E which character arrangement table to select when printing the line.

Q requests the system to translate a magnetic tape from ASCII to EBCDIC or from EBCDIC to ASCII.

R requests the use of relative block addressing.

T requests the use of the user totaling facility.

W requests the system to perform a validity check when data is written on a direct access device.

Z requests the control program to shorten its normal error recovery procedure for input on magnetic tape.

You can request any or all of the services by combining the values for this operand. You may combine the characters in any sequence, being sure to separate them with blanks or commas.

EROPT({ACC, SKP, ABE})
specifies the option that you want to execute if an error occurs when a record is read or written. The options are:

ACC to accept the block of records in which the error was found.

SKP to skip the block of records in which the error was found.

ABE to end the task abnormally.

BFTEK({S, E, A, R})
specifies the type of buffering that you want the system to use. The types that you can specify are:

S Simple buffering

E Exchange buffering

A Automatic record area buffering

R Record buffering

RECFM(A, B, D, F, M, S, T, U, and/or V)
specifies the format and characteristics of the records in the data set. The format and characteristics must be completely described by one source only. If they are not available from any source, the default is an undefined-length record. For a discussion of the formats and characteristics of the RECFM subparameter of the DCB parameter, see *OS/390 MVS JCL Reference*.

Use the following values with the RECFM operand:

A indicates the record contains ASCII printer control characters.

B indicates the records are blocked.

D indicates variable-length ASCII records.

F indicates the records are of fixed-length.

M indicates the records contain machine code control characters.

S indicates, for fixed-length records, the records are written as standard blocks (there must be no truncated blocks or unfilled tracks except for the last block or track). For variable-length records, a record might span more than one block. Exchange buffering, BFTEK(E), must not be used.

T indicates the records can be written onto overflow tracks, if required. Exchange buffering, BFTEK(E), or chained scheduling, OPTCD(C), cannot be used.

U indicates the records are of undefined-length.

V indicates the records are of variable-length.

You can specify one or more values for this operand; at least one is required. If you use more than one value, you must separate each value with a comma or a space.

With SMS, the record format for a new data set might have been defined by the DATACLAS operand.

RECFM is mutually exclusive with RECORG.

DIAGNS(TRACE)
specifies the Open/Close/EOV trace option that gives a module-by-module trace of the Open/Close/EOV work area your DCB.

LIMCT(*search_number***)**
specifies the number of blocks or tracks to be searched for a block or available space. The number must not exceed 32,760.

BUFOFF({*block_prefix_length* **| L})**
specifies the buffer offset. The block prefix length must not exceed 99. L is specified if the block prefix field is four bytes long and contains the block length.

DSORG({DA, DAU, PO, POU, PS, PSU})
specifies the data set organization as follows:

DA Direct access

DAU Direct access unmovable

PO Partitioned organization

POU Partitioned organization unmovable

PS Physical sequential

PSU Physical sequential unmovable

DEN({0 | 1 | 2 | 3 | 4})
specifies the magnetic tape density as follows:

0 200 bpi/7 track
1 556 bpi/7 track
2 800 bpi/7 and 9 track

3 1600 bpi/9 track
4 6250 bpi/9 track (IBM 3420 Models 4, 6, and 8, or equivalent)

TRTCH({C | E | T | ET}, {COMP | NOCOMP})
specifies the recording technique for 7 track tape as follows:

C Data **c**onversion with odd parity (the default) and no translation (the default).

E **E**ven parity with no translation (the default) and no conversion (the default).

T Odd parity (the default) and no conversion (the default). BCD to EBCDIC **t**ranslation when reading and EBCDIC to BCD translation when writing.

ET **E**ven parity, and no conversion (the default). BCD to EBCDIC **t**ranslation when reading and EBCDIC to BCD translation when writing.

COMP | NOCOMP specifies whether data sets are to be compressed to save space.

This operand is mutually exclusive with KEYLEN.

KEYLEN(*bytes*)
specifies the length, in bytes, of each of the keys used to locate blocks of records in the data set when the data set resides on a direct access device. The key length must not exceed 255 bytes. If an existing data set has standard labels, you can omit this operand and let the system retrieve the key length from the standard label. If a key length is not supplied by any source before you issue an OPEN macro instruction, a length of zero (no keys) is assumed. This operand is mutually exclusive with TRTCH.

ATTRIB Command Return Codes

Figure 1-6. ATTRIB Command Return Codes

0	Processing successful.
12	Processing unsuccessful. An error message has been issued.

ATTRIB Command Examples

Example 1

Operation: Create a list of attributes to be assigned to a data set when the data set is allocated.

Known:

The following attributes correspond to the DCB operands that you want assigned to a data set.

- Optional services: Chained-scheduling, user totaling
- Expiration date: Dec. 31, 1985
- Record format: Variable-length spanned records
- Error option: Abend when READ or WRITE error occurs
- Buffering: Simple buffering
- Boundary alignment: Doubleword boundary
- Logical record length: Records may be larger than 32756 bytes
- Name of the attribute list: DCBPARMS

```
attr dcbparms optcd(c t) expdt(85365) recfm(v s) -
eropt(abe)  bftek(s)  bfaln(d) lrecl(x)
```

Example 2

Operation: This example shows how to create an attribute list, how to use the list when allocating two data sets, and how to free the list so that it cannot be used again.

Known:

- The name of the attribute list: DSATTRS
- The attributes: EXPDT(99365) BLKSIZE(24000) BFTEK(A)
- The name of the first data set: FORMAT.INPUT
- The name of the second data set: TRAJECT.INPUT

```
attrib dsattrs expdt(99365) blksize(24000) -
bftek(a)

allocate dataset(format.input) new block(80) -
space(1,1) volume(111111) using(dsattrs)

alloc da(traject.input) old bl(80) volume(111111) -
using(dsattrs)

free attrlist(dsattrs)
```

CALL Command

Use the CALL command to load and execute a program that exists in executable (load module) form. The program can be user-written, or it can be a system module such as a compiler, sort, or utility program.

You must specify the name of the program (load module) to be processed, except in those situations where the CALL command assumes module “TEMPNAME”. The program specified must be a member of a partitioned data set (PDS) or an extended partitioned data set (PDSE).

You can specify a list of parameters to be passed to the specified program. The system formats this data so that when the program receives control, register 1 contains the address of a fullword. The three low-order bytes of this fullword contain the address of a halfword field. This halfword field is the count of the number of bytes of information contained in the parameter list. The parameters immediately follow the halfword field.

When you pass parameters to a PL/I program, precede them with a slash (/). PL/I assumes that any value prior to the slash is a run-time option.

When you pass parameters to a C program, precede them with a slash (/) only if you have specified the EXECOPS run-time option; otherwise, the slash character will be included in the characters passed as parameters.

If the program terminates abnormally, you are notified of the condition and may enter a TEST command to examine the failing program.

CALL Command in the Background

Service aids, utilities, and other programs obtaining their input from an allocated file such as SYSIN must have the input in a data set or a job stream data set (one which contains the JCL to run the job and the data itself). After the data set is created, you can use the CALL command to execute the program that accesses the SYSIN data. Figure 1-7 illustrates the allocation and creation of input data sets. Information about command processing in the foreground and background is described in *OS/390 TSO/E User's Guide*.

```
//examp1   exec    pgm=ikjeft01,dynamnbr=20
//systsprt dd      sysout=a
//systsin  dd      *
  profile prefix(user1)
  allocate file (sysprint) dataset(*)
  allocate file(sysin) altfile(inputdd)
  call (prog1)
  allocate file(sysin) altfile(inputdd2) reuse
  call (prog2)
  free all
//inputdd  dd     *
  **input to prog1**
//inputdd2 dd     *
  **input to prog2**
/*
```

Figure 1-7. Allocating and Creating Input Data Sets in the Background

Note: Allocating the input file to a terminal results in an I/O error message. Abnormal termination occurs when the program tries to get input from the terminal.

CALL Command Syntax

```
►►─CALL─┬─*─────────┬─┬──────────────┬─┬──────────────────────────────►
        └─dsname────┘ └─(member_name)─┘ └─'parameter_string'─┘
►─┬─CAPS─┬─┬─NOENVB───┬──────────────────────────────────────────────►◄
  └─ASIS─┘ └─PASSENVB─┘
```

CALL Command Operands

dsname
specifies the name of a PDS or a PDSE from which the program is to be executed. If *dsname* is not fully qualified, it is assumed to be `'prefix.dsname.LOAD'`.

***** specifies that CALL should use the standard load module search sequence for the member name.

(*member_name***)**
specifies the program name to be executed. When you specify only a *member_name*, the fully—qualified dsname and *member_name*, it is assumed to be `'prefix.LOAD(member_name)'`. If *member_name*, is not specified, the member `'TEMPNAME'` is assumed.

Note: CALL command processing allocates the data set you specify and then accesses the member:

1. When allocating the data set, it is possible that the cataloged version of the data set will not be used, but rather a different copy that has already been allocated in your TSO/E session. For information about how MVS dynamic allocation may convert an existing allocation, refer to *OS/390 MVS Programming: Authorized Assembler Services Guide*.
2. When giving control to the program, the data set you specify on the CALL command is established as a task library. The tasklib is effective for the execution of the CALL command.

parameter_string

specifies up to 100 characters of information that you want to pass to the program as a parameter string. The character string can contain DBCS characters that you delimit with shift-out (`X'0E'`) and shift-in (`X'0F'`) characters.

The program to be executed must receive parameters according to the standard linkage conventions. These are the same conventions that would apply if the program was executed by batch job control language (JCL) and a parameter string was passed by the EXEC statement with the PARM keyword.

Some utilities accept multiple entry parameter lists; for example, to pass a list of alternate ddnames, TSO/E commands require a special multiple entry parameter list known as a command processor parameter list (CPPL). Neither of these options are supported by the CALL command, whose primary purpose is to support the execution of programs written for a batch processing environment rather than a TSO/E environment.

ASIS | <u>CAPS</u>

ASIS prevents translation of a parameter list to uppercase characters. Use ASIS for programs that accept mixed case characters in a parameter list; the CALL command will not alter the parameters in any way when the ASIS option is specified.

<u>CAPS</u> translates the parameter list to uppercase characters. CAPS is the default.

PASSENVB | <u>NOENVB</u>

PASSENVB passes the currently active REXX environment block (ENVBLOCK) address to the invoked program in register 0. The currently active REXX ENVBLOCK is obtained from the environment to which the CALL command is directed. See “Example 6” on page 1-79 and “Example 7” on page 1-79 for uses of PASSENVB in REXX execs. This operand is:

- recognized for unauthorized programs and non-isolated environments
- ignored for authorized programs and isolated environments.

For a description of isolated environments, refer to *OS/390 TSO/E Programming Services*. For further information about the REXX environment block refer to *OS/390 TSO/E REXX Reference*.

NOENVB does not pass a REXX environment block (ENVBLOCK) address. The contents of register 0 on entry to the invoked program are unpredictable. NOENVB is the default.

CALL Command Return Codes

Figure 1-8. CALL Command Return Codes

0	Processing successful.
12	Processing unsuccessful. An error message has been issued.
Other	Return code is from the called program.

CALL Command Examples

Example 1

Operation: Execute a load module.

Known:

- The name of the load module: JUDAL.PEARL.LOAD(TEMPNAME)
- Parameters: 10,18,23

```
call pearl '10,18,23'
```

Example 2

Operation: Execute a load module.

Known:

- The name of the load module: JUDAL.MYLIB.LOAD(COS1)

```
call mylib(cos1)
```

Example 3

Operation: Execute a PL/I load module passing a parameter.

Known:

- The name of the load module: D58ABC.PCP.LOAD(MOD1)
- The parameter to be passed: The character string ABC

```
call 'd58abc.pcp.load(mod1)' '/abc'
```

Example 4

Operation: Execute a C load module passing a parameter list in mixed case. The called program will accept the parameters as passed.

Known:

- The name of the load module: C58ABC.C.LOAD(MOD1)
- The parameter to be passed: The character string ‘a BcD’
- The NOEXECOPS option is specified so there is no need to precede the parameter list with a slash character.

```
call 'C58abc.c.load(mod1)' 'a BcD' asis
```

Example 5

Operation: Execute a C load module passing a parameter list with run-time options. The EXECOPS run-time option must be specified.

Known:

- The name of the load module: C58ABC.C.LOAD(MOD1)
- The parameter to be passed: The character string ‘a bcd’

```
call 'C58abc.c.load(mod1)' 'NOTEST /a bcd'
```

Example 6

Operation: Execute an ASM load module from a REXX exec passing the REXX environment block address to the ASM program in register 0.

Known:

- The name of the load module: STEVE.LOAD(PGM)

```
/*  REXX  */
address tso "CALL 'STEVE.LOAD(PGM)' PASSENVB"
```

Example 7

Operation: Execute an ASM load module from a REXX exec invoked under IPCS.

Known:

- The name of the load module: STEVE.LOAD(PGM)
- The name of the REXX exec: STEVE.EXEC(RUNIT)

```
/*  REXX  */
address tso "ISPSTART PGM(BLSG) PARM(CMD(RUNIT))"

/*  REXX  exec RUNIT  */
address ipcs "CALL 'STEVE.LOAD(PGM)' PASSENVB"
```

For further information concerning IPCS, refer to *OS/390 MVS IPCS User's Guide*.

CANCEL Command

Use the CANCEL command to halt processing of batch jobs that you have submitted from your terminal. A READY message is displayed at your terminal if the job has been cancelled successfully. A message is also displayed at the system operator's console when a job is cancelled.

CANCEL is a foreground-initiated-background (FIB) command. You must have authorization from installation management to use CANCEL. This command is generally used with the SUBMIT, STATUS, and OUTPUT commands.

Requesting an attention interrupt after issuing a CANCEL command might terminate that command's processing. In this case, you cannot resume CANCEL processing by pressing the Enter key as you can after most attention interrupts.

CANCEL Command Syntax

```
►►─CANCEL─(─┬─┬─jobname─┬─────────┬─┬─┬─)─┬─NOPURGE─┬──────────────────►◄
            │ │         └─(jobname)─┘ │ │   └─PURGE─┘
            └─┴─,─────────────────────┘ │
                                        │
                                        └
```

CANCEL Command Operands

(*jobname* **(***jobid***))**

specifies the names of the jobs that you want to cancel. The job names must consist of your user identification plus 1 to 8 alphanumeric characters. However, if your installation has replaced the default IBM-supplied CANCEL exit, you may be allowed to specify different job names.

The optional job ID subfield can consist of 1 to 8 alphanumeric characters. The first character must be alphabetic or one of the special characters (#, $, or @). The job ID is a unique job identifier assigned by the job entry subsystem (JES) at the time the job was submitted to the batch system. Currently the only valid forms of job identifiers (*jobid*) assigned by JES are:

`JOBnnnnn` or `Jnnnnnnn` – Jobs
`STCnnnnn` or `Snnnnnnn` – Started Tasks
`TSUnnnnn` or `Tnnnnnnn` – TSO Users

The job ID is needed if you have submitted two jobs with the same name.

Note the following:

- When you specify a list of several job names, you must separate the job names with standard delimiters and you must enclose the entire list within parentheses.
- Jobs controlled by the subsystems are considered started tasks and cannot be cancelled by the CANCEL command.
- If your installation uses security labels and security checking, each job has a security label associated with it. You may submit a job at a greater security label than you are currently logged on with provided that you are defined to that security label. However, to cancel a job, the security label you are logged on with must be equal to or greater than the security label that the job was submitted at.

NOPURGE | PURGE

NOPURGE specifies jobs are to be cancelled if they are in execution, but output generated by the jobs remains available. If the jobs have executed, the output remains available.

PURGE specifies the job and its output (on the output queue) are to be purged from the system.

CANCEL Command Return Codes

Figure 1-9. CANCEL Command Return Codes

0	Processing successful.
12	Processing unsuccessful. An error message has been issued.

CANCEL Command Examples

Example 1

Operation: Cancel a batch job.

Known:

- The name of the job: JE024A1

```
cancel je024a1
```

Example 2

Operation: Cancel several batch jobs.

Known:

- The names of the jobs: D58BOBTA D58BOBTB(J51) D58BOBTC

```
cancel (d58bobta d58bobtb(j51) d58bobtc)
```

DELETE Command

Use the DELETE command to delete one or more data set entries or one or more members of a partitioned data set. The catalog entry for a partitioned data set is removed only when the entire partitioned data set is deleted. The system deletes a member of a partitioned data set by removing the member name from the directory of the partitioned data set.

When you specify one of your data set names to be deleted the system adds your user ID and, if possible, a descriptive qualifier. Because this can change your intended request, be careful when deleting data sets that you do not delete data sets you want to keep. For example, if you want to delete data set Z, you would specify DELETE Z. But if data set Z did not exist and there were a data set Z.Y, data set Z.Y would be deleted. The system derives the descriptive qualifier Y from the catalog and deletes that data set.

If more than one descriptive qualifier exists for a data set, the system will prompt you for the additional information. For example, if you have data sets Z.X and Z.Y and you issue the command DELETE Z, the system will ask you to specify qualifier X or Y.

Members of a partitioned data set and aliases for any members must each be deleted explicitly. That is, when you delete a member, the system does not remove any alias names of the member. Also, when you delete an alias name, the member itself is not deleted.

If a generation_data_group entry is to be deleted, any generation data sets that belong to it must have been deleted.

For MVS, the original TSO/E DELETE command has been replaced by the Access Method Services command with the same name. Note that when you delete a data set, you must also free the allocated ddnames. If you want to modify VSAM objects or use the other Access Method Services from a terminal, see *DFSMS/MVS Access Method Services for VSAM*. For error message information, see the MVS/ESA System Messages library.

The DELETE command supports unique operand abbreviations in addition to the usual abbreviations produced by truncation. The syntax and operand explanations show these unique cases.

Before you delete a protected non-VSAM data set, you should use the PROTECT command to delete the password from the password data set. This prevents you from having insufficient space for future entries.

DELETE Command Syntax

```
►►──┬─DELETE─┬──(──┬─entry_name──┬──────────┬──)──────────────────────────►
    └─DEL────┘     │              └─/password─┘
                   ◄──────────────────────────┘
►──┬──────────────────────────────────────────┬──┬──────────────────────────►
   └─CATALOG(catalog_name──┬──────────┬──)──┘  └─FILE(ddname)──┘
                           └─/password─┘
►──┬─┬─NOPURGE─┬─┬──────────────────────────┬──┬─┬─SCRATCH───────┬──────────►
   │ └─NPRG────┘ │                          │  │ └─NOSCRATCH─┬─┬─┘
   │             │                          │  │             └─NSCR──┘
   └─PURGE─────┬─┘  ┬─ERASE───────┬──────┬──┘  └─────────────────────────────
   └─PRG───────┘    │ └─NOERASE─┬─┘      │
                    └───────────┘ └─NERAS─┘
►──┬─CLUSTER──────────────────────────────────────────────────────────────►◄
   ├─┬─USERCATALOG─┬──────────────────────────────────────────────────────
   │ └─UCAT────────┘
   ├─┬─SPACE─┬──────────────────────────────────────────────────────────
   │ └─SPC───┘
   ├─┬─NONVSAM─┬──────────────────────────────────────────────────────────
   │ └─NVSAM───┘
   ├─ALIAS──────────────────────────────────────────────────────────────
   ├─┬─GENERATIONDATAGROUP─┬──────────────────────────────────────────────
   │ └─GDG───────────────────┘
   └─┬─PAGESPACE─┬──────────────────────────────────────────────────────
     └─PGSPC─────┘
```

DELETE Command Operands

entry_name|*password*

is a required operand that names the entries in the designated catalogs to be deleted. When more than one entry is to be deleted, the list of entry_names must be enclosed in parentheses. This operand must be the first parameter following DELETE.

If you want to delete several data set entries having similar names, you can insert an asterisk into the data set name at the point of dissimilarity. That is, all data set entries whose names match except at the position where the asterisk is placed are deleted. However, you can use only one asterisk per data set name. It cannot appear in the first position.

For example, assume that you have several data set entries named:

```
VACOT.SOURCE.PLI
VACOT.SOURCE2.PLI
VACOT.SOURCE2.TEXT
VACOT.SOURCE2.DATA
```

If you specify

```
delete source2.*
```

the only data set entry remaining is:

```
VACOT.SOURCE.PLI
```

password
specifies a password for a password-protected entry. Passwords can be specified for each entry_name or the catalog's password can be specified through the CATALOG operand for the catalog that contains the entries to be deleted.

CATALOG(*catalog_name***[/***password***])**
specifies the name of the catalog that contains the entries to be deleted.

catalog_name identifies the catalog that contains the entry to be deleted.

password specifies the master password of the catalog that contains the entries to be deleted.

FILE(*ddname***)**
specifies the name of the DD statement that identifies the volume that contains the data set to be deleted or identifies the entry to be deleted.

PURGE | PRG | NOPURGE | NPRG

PURGE | PRG specifies the entry is to be deleted even if the retention period, specified in the TO or FOR operand, has not expired.

NOPURGE | NPRG specifies the entry is not to be deleted if the retention period has not expired. When NOPURGE is coded and the retention period has not expired, the entry is not deleted. NOPURGE is the default.

ERASE | NOERASE | NERAS

ERASE specifies the data component of a cluster (VSAM only) is to be overwritten with binary zeros when the cluster is deleted. If ERASE is specified, the volume that contains the data component must be mounted.

NOERASE | NERAS specifies the data component of a cluster (VSAM only) is not to be overwritten with binary zeros when the cluster is deleted.

SCRATCH | NOSCRATCH | NSCR

SCRATCH specifies a non-VSAM data set is to be scratched (removed) from the volume table of contents (VTOC) of the volume on which it resides. SCRATCH is the default.

NOSCRATCH | NSCR specifies a non-VSAM data set is not to be scratched (removed) from the VTOC of the volume on which it resides.

CLUSTER
specifies the entry to be deleted is a cluster entry for a VSAM data set.

USERCATALOG | UCAT
specifies the entry to be deleted is a user-catalog entry. This operand must be specified if a user catalog is to be deleted. A user catalog can be deleted only if it is empty.

SPACE | SPC
specifies the entry to be deleted is a data-space entry. This operand is required if a data space is to be deleted. A data space can be deleted only if it is empty.

NONVSAM | NVSAM
specifies the entry to be deleted is a non-VSAM data set entry.

ALIAS
specifies the entry to be deleted is an alias entry.

GENERATIONDATAGROUP | GDG
specifies the entry to be deleted is a generation-data-group entry. A generation-data-group base can be deleted only if it is empty.

PAGESPACE | PGSPC
specifies a page space is to be deleted. A page space can be deleted only if it is inactive.

If the FILE operand is omitted, the entry_name is dynamically allocated in the following cases:

- A non-VSAM entry is to be deleted and scratched.
- An entry is to be deleted and erased.
- An entry that resides in a data space of its own is to be deleted.

DELETE Command Return Codes

Figure 1-10. DELETE Command Return Codes

0	Processing successful. Informational messages might have been issued.
4	Processing successful, but a warning message has been issued.
8	Processing was completed, but specific details were bypassed.
12	Processing unsuccessful.
16	Severe error or problem encountered.

DELETE Command Example

Example

Operation: Delete an entry. In this example, a non-VSAM data set is deleted.

Known:

- The name of the data set to be deleted is EXAMPLE.NONVSAM.
- The prefix in the profile is D27UCAT.
- Your user ID is D27UCAT.

```
delete example.nonvsam scratch nonvsam
```

The DELETE command deletes the non-VSAM data set (D27UCAT.EXAMPLE.NONVSAM). Because the catalog in which the entry resides is assumed not to be password protected, the CATALOG operand is not required to delete the non-VSAM entry.

SCRATCH removes the VTOC entry of the non-VSAM data set. Because FILE is not coded, the volume that contains D27UCAT.EXAMPLE.NONVSAM is dynamically allocated.

NONVSAM ensures the entry being deleted is a non-VSAM data set. However, DELETE can still find and delete a non-VSAM data set if NONVSAM is omitted.

EDIT Command

Use the EDIT command to enter data into the system. With EDIT and its subcommands, you can create, modify, store, submit, retrieve, and delete data sets with sequential or partitioned data set organization. You cannot, however, edit an SMS-managed partitioned data set extended (PDSE). The data sets might contain:

- Source programs composed of program language statements such as PL/I, COBOL, FORTRAN, and so on.
- Data used as input to a program.
- Text used for information storage and retrieval.
- Commands, subcommands, CLIST statements and/or data.
- Job control language (JCL) statements for background jobs.

The EDIT command supports only data sets that have one of the following formats:

- Fixed-blocked, unblocked, or standard block; with or without ASCII and machine record formats.
- Variable-blocked or unblocked; without ASCII or machine control characters.

EDIT support of print control data sets is read-only. Whenever a SAVE subcommand is entered for an EDIT data set originally containing print control characters, the ability to print the data set on the printer with appropriate spaces and ejects is lost. If you enter SAVE without operands for a data set containing control characters, you are warned that the data set will be saved without control characters, and you can choose to either save into the original data set or enter a new data set name. If the data set specified on the EDIT command is partitioned and contains print control characters, you cannot enter SAVE.

After you edit a data set with a variable-blocked record format, each record (line) is padded with blanks to the end of the record. When you save the data set, the blanks are eliminated and the length adjusted accordingly.

EDIT Command Syntax

```
►►─┬─EDIT─┬─data_set_name──┬──────────┬──┬─────────┬──┬──────────┬──►
   └─E────┘                └─/password┘  ├─EMODE──┤  ├─RECOVER──┤
                                         └─IMODE──┘  └─NORECOVER─┘

►──┬─────┬──────────────────────────────────────────────────────────►
   ├─NEW─┤
   └─OLD─┘

►──┬──────────────────────────────────────────────────────────────────────┬
   │ ┌─PLI──┐                                                            │
   │ └─PLIF─┘  └─(──┬──────────────────────────────────────────┬──┬─────┬─)─┘
   │                │ ┌─2──────────┐  ┌─72──────────┐          │  ├─CHAR60─┤
   │                │ └─integer_1──┘  ├─────────────┤          │  └─CHAR48─┘
   │                │                 └─integer_2───┘          │
   ├─ASM──────────────────────────────────────────────────────────────────┤
   ├─COBOL────────────────────────────────────────────────────────────────┤
   ├─GOFORT──┬─(FREE)──┬──────────────────────────────────────────────────┤
   │         └─(FIXED)─┘                                                  │
   ├─FORTE────────────────────────────────────────────────────────────────┤
   ├─FORTG────────────────────────────────────────────────────────────────┤
   ├─FORTGI───────────────────────────────────────────────────────────────┤
   ├─FORTH────────────────────────────────────────────────────────────────┤
   ├─TEXT─────────────────────────────────────────────────────────────────┤
   ├─DATA─────────────────────────────────────────────────────────────────┤
   ├─CLIST────────────────────────────────────────────────────────────────┤
   ├─CNTL─────────────────────────────────────────────────────────────────┤
   └─VSBASIC──────────────────────────────────────────────────────────────┘

                ┌─NUM(──┬──────────────┬──────────┬──)─┐
                │       └─integer_1────┘          │    │
                │                                 └─integer_2─┘
►──┬─NOSCAN─┬──┤                                                          │
   └─SCAN───┘  └─NONUM──────────────────────────────────────────────────┘

►──┬──────────────────────────────────────────────────────────────────────►◄
   │ ┌─BLOCK───┐──(integer)─┘  └─┬─LINE──┬──(integer)─┘  ├─CAPS─┤
   │ └─BLKSIZE─┘                └─LRECL─┘                └─ASIS─┘
```

EDIT Command Operands

data_set_name

specifies the name of the data set that you want to create or edit.

If you enter the name of a sequential data set, but the data set is actually found to be a partitioned data set, the member name TEMPNAME is assumed. See also the description of the OLD operand below.

password

specifies the password associated with the *data_set_name*. If the password is omitted and the data set is password protected, you are prompted for the data set's password. Read protected partitioned data sets prompt for the password twice, provided it is not entered on the EDIT command, or is not the same password as your LOGON user ID password.

EMODE | IMODE

EMODE specifies the initial mode of entry is edit mode. This is the default for OLD data sets. See *OS/390 TSO/E User's Guide*, for more information about using edit mode.

IMODE specifies the initial mode of entry is input mode. This is the default for NEW or empty data sets. See *OS/390 TSO/E User's Guide*, for more information about using input mode.

RECOVER | NORECOVER

RECOVER specifies that you intend to recover an EDIT work file containing the data set named on the EDIT command as the data set to be edited. You are placed in edit mode. This operand is valid only when your profile has the RECOVER attribute. See *OS/390 TSO/E User's Guide*, for more information.

NORECOVER specifies that you do not want to recover a work file, even if a recoverable work file exists.

NEW | OLD

NEW specifies the data set named by the first operand does not exist. If an existing cataloged data set already has the data set name that you specified, the system notifies you when you try to save it. Otherwise, the system allocates your data set when you save it. If you specify NEW without specifying a member name, a sequential data set is allocated for you when you save it. If you specify NEW and include a member name, the system allocates a partitioned data set and creates the indicated member when you try to save it.

OLD specifies the data set named on the EDIT command already exists. When you specify OLD and the system is unable to locate the data set, you are notified and you have to reenter the EDIT command. If you specify OLD without specifying a member name, the system assumes that your data set is sequential. If the data set is, in fact, a partitioned data set, the system assumes that the member name is TEMPNAME. If you specify OLD and include a member name, the system notifies you if your data set is not partitioned.

If you do not specify OLD or NEW, the system uses a tentative default of OLD. If the data set name or member name that you specified cannot be located, the system defaults to NEW.

Any user-defined data set type is also a valid data set type operand and can have subfield parameters defined by your installation (see Figure 1-11, note 4).

PLI
specifies the data identified by the first operand is for PL/I statements that are to be held as V-format records with a maximum length of 104 bytes. The statements can be for the PL/I Optimizing compiler or the PL/I Checkout compiler.

PLIF
specifies the data set identified by the first operand is for PL/I statements that are to be held as fixed format records 80 bytes long. The statements can be for the PL/I Optimizing compiler or the PL/I Checkout compiler.

integer_1 and *integer_2*
specify the column boundaries for your input statements. These values are applicable only when you request syntax checking of a data set for which the

PLIF operand has been specified. The position of the first character of a line, as determined by the left margin adjustment on your terminal, is column 1. The value for *integer_1* specifies the column where each input statement is to begin. The statement can extend from the column specified by *integer_1* up to and including the column specified as a value for *integer_2*. If you omit *integer_1*, you must omit *integer_2*. The default values are columns 2 and 72. However, you can omit *integer_2* without omitting *integer_1*.

CHAR48 | CHAR60

CHAR48 specifies the PL/I source statements are written using the character set that consists of 48 characters.

CHAR60 specifies the source statements are written using the character set that consists of 60 characters.

If no value is entered, the default value is CHAR60.

ASM
specifies the data set identified by the first operand is for assembler language statements.

COBOL
specifies the data set identified by the first operand is for COBOL statements.

CLIST
specifies the data set identified by the first operand is for a CLIST and contains TSO/E commands, subcommands, and CLIST statements as statements or records in the data set. The data set is assigned line numbers.

CNTL
specifies the data set identified by the first operand is for job control language (JCL) statements and SYSIN data to be used with the SUBMIT command or subcommand.

TEXT
specifies the data set identified by the first operand is for text that can consist of both uppercase and lowercase characters.

DATA
specifies the data set identified by the first operand is for data that can be subsequently retrieved or used as input data for processing by an application program.

FORTGE
specifies the data set identified by the first operand is for FORTRAN IV (E) statements.

FORTG
specifies the data set identified by the first operand is for FORTRAN IV (G) statements.

FORTGI
specifies the data set identified by the first operand is for FORTRAN IV (G1) statements.

FORTH
specifies the data set identified by the first operand is for FORTRAN IV (H) EXTCOMP statements.

GOFORT(FREE | FIXED)
specifies the data set identified by the first operand is for statements that are suitable for processing by the Code and Go FORTRAN program product. If you enter the descriptive qualifier without a data set type, the data set type default is GOFORT(FREE). If you do not specify a FORTRAN language level, GOFORT is the default value. FREE specifies the statements are of variable-lengths and do not conform to set column requirements. If you do not specify FREE or FIXED, FREE is the default. FIXED specifies statements adhere to standard FORTRAN column requirements and are 80 bytes long.

VSBASIC
specifies the data set identified by the first operand is for VSBASIC statements.

The ASM, CLIST, CNTL, COBOL, DATA, FORTGI, FORTH, GOFORT, PLI, PLIF, TEXT, and VSBASIC operands specify the type of data set you want to edit or create. You must specify one of these whenever:

- The *data_set_name* operand does not follow data set naming conventions (that is, it is enclosed in quotes).
- The *data_set_name* operand is a member name only (that is, it is enclosed in parentheses).
- The *data_set_name* operand does not include a descriptive qualifier or the descriptive qualifier is such that EDIT cannot determine the data set type.

The system prompts you for data set type whenever the type cannot be determined from the descriptive qualifier (as in the 3 cases above), or whenever you forget to specify a descriptive qualifier on the EDIT command.

Note: If PLI is the descriptive qualifier, the data set type default is PLI. To use data set types GOFORT, FORTGI, or FORTH, you must enter the data set type operand to save it.

SCAN | NOSCAN

SCAN specifies each line of data you enter in input mode is to be checked, statement by statement, for proper syntax. Syntax checking is available only for statements written in FORTGI or FORTH.

If your installation specified a syntax checker after system generation, user-defined data set types can also use the SCAN operand.

NOSCAN specifies syntax checking is not to be performed. NOSCAN is the default.

NUM(*integer_1 integer_2***) | NONUM**

NUM(*integer_1 integer_2***)** specifies lines of the data set records are numbered. You can specify *integer_1* and *integer_2* for ASM type data sets only. *integer_1* specifies, in decimal, the starting column (73-80) of the line number. *integer_2* specifies, in decimal, the length (8 or less) of the line number. *integer_1* plus *integer_2* cannot exceed 81. If *integer_1* and

integer_2 are not specified, the line numbers assume appropriate default values.

NUM is the default.

NONUM specifies your data set records do not contain line numbers. Do not specify this operand for the VSBASIC and CLIST data set types because they must always have line numbers.

BLOCK(*integer*) | BLKSIZE(*integer*)
specifies the maximum length, in bytes, for blocks of records of a new data set. Specify this operand only when creating a new data set or editing an empty old data set. You cannot change the block size of an existing data set except if the data set is empty. If you omit this operand, it defaults according to the type of data set being created. The IBM-supplied default values for the block sizes are described in Figure 1-11. To modify those default values, see *OS/390 TSO/E Customization*. The block size (BLOCK or BLKSIZE), for data sets that contain fixed-length records must be a multiple of the record length (LINE or LRECL). For variable-length records, the block size must be a multiple of the record length plus 4.

If BLKSIZE (80) is coded with RECFM(U), then the line is truncated by 1 character. This byte (the last one) is reserved for an attribute character.

LINE(*integer*) | LRECL(*integer*)
specifies the length of the records to be created for a new data set. Specify this operand only when creating a new data set or editing an empty old data set. The new data set is composed of fixed-length records with a logical record length equal to the specified integer. You cannot change the logical record size of an existing data set unless the data set is empty. If you specify this operand and the data set type is ASM, FORTGI, FORTH, COBOL, or CNTL, the integer must be 80. If this operand is omitted, the length defaults according to the type of data set being created. The IBM-supplied default values are described in Figure 1-11. To modify those default values, see *OS/390 TSO/E Customization*. Use this operand with the BLOCK or BLKSIZE operand.

CAPS | ASIS

CAPS specifies all input data and data on modified lines is to be converted to uppercase characters. If you omit both CAPS and ASIS, CAPS is the default unless the data set type is TEXT.

ASIS specifies input and output data are to retain the same form (uppercase and lowercase) as entered. ASIS is the default for TEXT only.

Figure 1-11. EDIT Command: Default Values for LINE or LRECL and BLOCK or BLKSIZE Operands

Data Set Type	DSORG	LRECL		Block Size		Line Numbers		
		LINE(n)		BLOCK(n)		NUM(n,m)	CAPS/ASIS	
		Default	Specif.	Default	Specif. (Note 1)	Default(n,m) Specif.	Default	CAPS Required
ASM	PS/PO	80	=80	3120	<=default	Last 8 73<=n<=80	CAPS	Yes
CLIST	PS/PO	255	(Note 2)	3120	<=default	(Note 3)	CAPS	Yes
CNTL	PS/PO	80	=80	3120	<=default	Last 8	CAPS	Yes
COBOL	PS/PO	80	=80	400	<=default	First 6	CAPS	Yes
DATA	PS/PO	80	<=255	3120	<=default	Last 8	CAPS	No
FORTE	PS/PO	80	<=255	3120	<=default	Last 8	CAPS	Yes
FORTG	PS/PO	80	<=255	3120	<=default	Last 8	CAPS	Yes
FORTGI	PS/PO	255	=80	400	<=default	Last 8	CAPS	Yes
FORTH	PS/PO	255	=80	400	<=default	Last 8	CAPS	Yes
GOFORT	PS/PO	255		3120	<=default	First 8	CAPS	Yes
(Or user supplied data set type - see Note 4)								
PLI	PS/PO	104	<=100	400	<=default	(Note 3)	CAPS	No
PLIF	PS/PO	80	<=100	400	<=default	Last 8	CAPS	Yes
TEXT	PS/PO	255	(Note 2)	3120	<=default	(Note 3)	ASIS	No
VSBASIC	PS/PO	255	=80	3120	<=32,760	First 5	CAPS	Yes

Notes

1. IBM supplies the default values. For information about how to modify the default values, see *OS/390 TSO/E Customization*.
2. Specifying a LINE value results in fixed-length records with a LRECL equal to the specified value. The specified value must always be equal to or less than the default. If the LINE operand is omitted, variable-length records are created.
3. The line numbers are contained in the last eight bytes of all fixed-length records and in the first eight bytes of all variable-length records.
4. A user can have additional data set types recognized by the EDIT command processor. You can modify the user-defined data set types along with any of the data sets shown above *after* system generation time by using the EDIT macro. The EDIT macro causes a table of constants to be built, which describes the data set attributes. For more information about how to modify the EDIT macro, see *OS/390 TSO/E Customization*.

   When you edit a data set type you defined yourself, the system uses the data set type as the descriptor (right-most) qualifier. You cannot override any data set types that have been defined by IBM. The EDIT command processor supports data sets that have the following attributes:

   Data Set Organization: Must be either sequential or partitioned
   Record Format: Fixed or variable
   Logical Record Size: Less than or equal to 255 characters
   Block Size: User specified-must be less than or equal to track length
   Sequence Number: V type--First 8 characters
   F type--Last 8 characters

EDIT Command Return Codes

Figure 1-12. EDIT Command Return Codes

0	Processing successful.
12	Processing unsuccessful.

EDIT Command Examples

Example 1

Operation: Create a data set to contain a COBOL program.

Known:

- The user-supplied name for the new data set: PARTS
- The fully-qualified name (where WRR05 is the user ID) will be: WRR05.PARTS.COBOL
- Line numbers are to be assigned.

```
edit parts new cobol
```

Example 2

Operation: Create a data set to contain a program written in FORTRAN to be processed by the FORTRAN (G1) compiler.

Known:

- The user-supplied name for the new data set: HYDRLICS
- The fully-qualified name (where WRR05 is the user ID) will be: WRR05.HYDRLICS.FORT
- The input statements are not to be numbered.
- Syntax checking is desired.
- Block size: 400
- Line length must be: 80
- The data is to be changed to all uppercase.

```
edit hydrlics new fortgi nonum scan
```

Example 3

Operation: Add data to an existing data set containing input data for a program.

Known:

- The name of the data set: WRR05.MANHRS.DATA
- Block size: 3120
- Line length: 80
- Line numbers are desired.
- The data is to be upper case.
- Syntax checking is not applicable.

```
e manhrs.data
```

Example 4

Operation: Create a data set for a CLIST.

Known:

- The user supplied name for the data set: CMDPROC

```
e cmdproc new clist
```

EDIT Subcommands (Overview)

Use the subcommands while in edit mode to edit and modify data and to communicate with the system operator and with other terminal users. The format of each subcommand is similar to the format of all the commands. Each subcommand, therefore, is presented and explained like that for a command. Figure 1-13 contains a summary of each subcommand's function.

For a complete description of the syntax and function of the ALLOCATE, ATTRIB, EXEC, FREE, HELP, PROFILE, SEND, and SUBMIT subcommands, refer to the description of the TSO/E command with the same name.

Note: Invocation of subcommands FORMAT, MERGE, RUN, and SUBMIT, without specifying data set name(s), causes the EDIT command to allocate a new and cataloged data set with the name of 'PREFIX.SUBCOMMAND.DATE.TIME'. The data set is deleted when the subcommand completes. If you are running with profile NOPREFIX, you might want to set PREFIX to the user ID.

Figure 1-13 (Page 1 of 2). Subcommands and Functions of the EDIT Command

ALLOCATE	Allocates data sets and file names.
ATTRIB	Builds a list of attributes for non-VSAM data sets.
BOTTOM	Moves the pointer to the last record in the data set.
CHANGE	Alters the contents of a data set.
CKPT	Protects input or modifications to a data set.
COPY	Copies records within the data set.
DELETE	Removes records.
DOWN	Moves the pointer toward the end of the data.
END	Terminates the EDIT command.
EXEC	Executes a CLIST or REXX exec.
FIND	Locates a character string.
FORMAT [2]	Formats and lists data.
FREE	Releases previously allocated data sets.
HELP	Explains available subcommands.
INPUT	Prepares the system for data input.
INSERT	Inserts records.
Insert/ Replace/ Delete	Inserts, replaces, or deletes a line.
LIST	Prints out specific lines of data.
MERGE [2]	Combines all or parts of data sets.
MOVE	Moves records within a data set.
PROFILE	Specifies characteristics of your user profile.
RENUM	Numbers or renumbers lines of data.

[2] Available as an optional program product.

Figure 1-13 (Page 2 of 2). Subcommands and Functions of the EDIT Command	
RUN	Causes compilation and execution of data set.
SAVE	Retains the data set.
SCAN	Controls syntax checking.
SEND	Allows you to communicate with the system operator and with other terminal users.
SUBMIT	Submits a job for execution in the background.
TABSET	Sets the tabs.
TOP	Sets the pointer to zero value.
UNNUM	Removes line numbers from records.
UP	Moves the pointer toward the start of data set.
VERIFY	Causes current line to be listed whenever the current line pointer changes or the text of the current line is modified.

EDIT—ALLOCATE Subcommand

Use the ALLOCATE subcommand to dynamically allocate the data sets required by a program that you intend to execute. For a description of the ALLOCATE command syntax and function, see the “ALLOCATE Command” on page 1-19.

EDIT—ATTRIB Subcommand

The ATTRIB subcommand of EDIT performs the same function as the ATTRIB command without leaving edit mode. For a description of the ATTRIB command syntax and function, see the “ATTRIB Command” on page 1-67.

EDIT—BOTTOM Subcommand

Use the BOTTOM subcommand to change the current line pointer to the last line of the data set you are editing or to contain a zero value (if the data set is empty). This subcommand can be useful when following subcommands such as INPUT or MERGE must be at the end of the data set.

EDIT—BOTTOM Subcommand Syntax

```
►►─┬─BOTTOM─┬──────────────────────────────────────────────────────►◄
   └─B──────┘
```

EDIT—CHANGE Subcommand

Use the CHANGE subcommand to modify a sequence of characters in a line or in a range of lines. Either the first occurrence or all occurrences of the sequence can be modified.

EDIT—CHANGE Subcommand Syntax

```
                   ┌─*──────────┐
                   │   └─count_1─┘                          │
►►─┬─CHANGE─┬──┼──────────────────────────────────────┼──┬─string_1─┬──►
   └─C──────┘  └─line_number_1──┬──────────────┬─┘  └─count_2─┘
                                └─line_number_2─┘

►──┬──────────────────────────────────────────────────────────────────►◄
   └─string_2──┬──────────┬─┘
               └─ALL──────┘
```

EDIT—CHANGE Subcommand Operands

line_number_1
specifies the number of a line you want to change. When used with *line_number_2*, it specifies the first line of a range of lines.

line_number_2
specifies the last line of a range of lines that you want to change. The specified lines are scanned for first occurrence of the sequence of characters specified for *string_1*.

***** specifies the line pointed to by the line pointer in the system to be used. If you do not specify a line number or an asterisk (*), the current line is the default.

count_1
specifies the number of lines that you want to change, starting at the position indicated by the asterisk (*).

string_1
specifies a sequence of characters that you want to change. The sequence must be (1) enclosed within single quotes, or (2) preceded by an extra character which serves as a special delimiter. The extra character may be any printable character other than a single quote (apostrophe), number, blank, tab, comma, semicolon, parenthesis, or asterisk. The hyphen (-) and plus (+) signs can be used, but should be avoided because of possible confusion with their use in continuation. If the first character in the character string is an asterisk (*), do not use a slash (/) as the extra character. (TSO/E interprets the `/*` as the beginning of a comment.) The extra character must not appear in the character string. Do not put a standard delimiter between the extra character and the string of characters unless you intend the delimiter to be treated as a character in the character string.

If *string_1* is specified and *string_2* is not, the specified characters are displayed at your terminal up to (but not including) the sequence of characters that you specified for *string_1*. You can then complete the line.

Note: If you are changing a string to a string of larger size, EDIT inserts the larger string and attempts to preserve the rest of the line, including spaces.

string_2
specifies a sequence of characters that you want to use as a replacement for *string_1*. Like *string_1*, *string_2* must be (1) enclosed within single quotes, or (2) preceded by a special delimiter. This delimiter must be the same as the extra character used for *string_1*. Optionally, this delimiter can also immediately follow *string_2*.

Note: If you are changing a string to a string of larger size, EDIT inserts the larger string and attempts to preserve the rest of the line, including spaces.

ALL
specifies every occurrence of *string_1* within the specified line or range of lines are replaced by *string_2*. If this operand is omitted, only the first occurrence of *string_1* is replaced with *string_2*.

If you cause an attention interruption during the CHANGE subcommand when using the ALL operand, your data set might be partially changed. It is good practice to list the affected area of your data set before continuing.

If the special delimiter form is used, *string_2* must be followed by the delimiter before typing the ALL operand.

count_2
specifies a number of characters to be displayed at your terminal, starting at the beginning of each specified line.

Quoted-String Notation

As indicated above, instead of using special delimiters to indicate a character string, you can use paired single quotes (apostrophes) to accomplish the same function with the CHANGE subcommand. The use of single quotes as delimiters for a character string is called *quoted-string notation*. Following are the rules for quoted-string notation for the *string_1* and *string_2* operands:

- Do not use both special-delimiter and quoted-string notation in the same subcommand.
- Enclose each string with single quotes; for example, `'This is string 1' 'This is string 2'`. Quoted strings must be separated with a blank.
- Use two single quotes to represent a single quote within a character string; for example, `'pilgrim's progress'`.
- Use two single quotes to represent a null string; for example,''.

You can specify quoted-string notation in place of special-delimiter notation to accomplish any of the functions of the CHANGE subcommand as follows:

Function	*Special-Delimiter Notation	Quoted-String Notation
Replace	!ab!cde!	'ab''cde'
Delete	!ab!!or!ab!	'ab' ''
Print up to	!ab	'ab'
Place in front of	!!cde!	'' 'cde'

* - using the exclamation point (!) as the delimiter.

Note the following:

1. Choose the form that best suits you (either special-delimiter or quoted-string) and use it consistently. It will help you use the subcommand.
2. If you cause an attention interruption during the CHANGE subcommand, your data set might not be completely changed. You should list the affected parts of your data set before entering other subcommands.

Combinations of Operands

You can enter several different combinations of these operands. The system interprets the operands that you enter according to the following rules:

- When you enter a single number and no other operands, the system assumes that you are accepting the default value of the asterisk (*) and that the number is a value for the *count_2* operand.
- When you enter two numbers and no other operands, the system assumes that they are *line_number_1* and *count_2* respectively.
- When you enter two operands and the first is a number and the second begins with a character that is not a number, the system assumes that they are *line_number_1* and *string_1*.
- When you enter three operands and they are all numbers, the system assumes that they are *line_number_1*, *line_number_2*, and *count_2*.
- When you enter three operands and the first two are numbers, but the last begins with a character that is not a number, the system assumes that they are *line_number_1*, *line_number_2*, and *string_1*.

EDIT—CHANGE Subcommand Examples

Example 1

Operation: Change a sequence of characters in a particular line of a line-numbered data set.

Known:

- The line number: 57
- The old sequence of characters: parameter
- The new sequence of characters: operand

```
change 57 XparameterXoperand
```

Example 1A

Operation: Change a sequence of characters in a particular line of a line-numbered data set.

Known:

- The line number: 57
- The old sequence of characters: parameter
- The new sequence of characters: operand

```
change 57 'parameter' 'operand'
```

Example 2

Operation: Change a sequence of characters wherever it appears in several lines of a line-numbered data set.

```
change 24 82 !i.e. !e.g. ! all
```

The blanks following the *string_1* and *string_2* examples (`i.e.` and `e.g.`) are treated as characters.

Example 3

Operation: Change part of a line in a line-numbered data set.

Known:

- The line number: 143
- The number of characters in the line preceding the characters to be changed: 18

```
change 143 18
```

This form of the subcommand causes the first 18 characters of line number 143 to be displayed at your terminal. You complete the line by typing the new information and enter the line by pressing the Enter key. All of your changes are incorporated into the data set.

Example 4

Operation: Change part of a particular line of a line-numbered data set.

Known:

- The line number: 103
- A string of characters to be changed: 315 h.p. at 2400

```
change 103 m315 h.p. at 2400
```

This form of the subcommand causes line number 103 to be searched until the characters 315 h.p. at 2400 are found. The line is displayed at your terminal up to the string of characters. You can then complete the line and enter the new version into the data set.

Example 5

Operation: Change the values in a table.

Known:

- The line number of the first line in the table: 387
- The line number of the last line in the table: 406
- The number of the column containing the values: 53

```
change 387 406 52
```

Each line in the table is displayed at your terminal up to the column containing the value. As each line is displayed, you can type in the new value. The next line is not displayed until you complete the current line and enter it into the data set.

Example 6

Operation: Add a sequence of characters to the front of the line that is currently referred to by the pointer within the system.

Known:

- The sequence of characters: in the beginning

```
change * //in the beginning
```

Example 6A

Operation: Add a sequence of characters to the front of the line that is currently referred to by the pointer within the system.

Known:

- The sequence of characters: in the beginning

```
change * '' 'in the beginning'
```

Example 7

Operation: Delete a sequence of characters from a line-numbered data set.

Known:

- The line number containing the string of characters: 15
- The sequence of characters to be deleted: weekly

```
change 15 /weekly//
```

or

```
change 15 /weekly/
```

Example 7A

Operation: Delete a sequence of characters from a line-numbered data set.

Known:

- The line number containing the string of characters: 15
- The sequence of characters to be deleted: weekly

```
change 15 'weekly' '
```

Example 8

Operation: Delete a sequence of characters wherever it appears in a line-numbered data set containing line numbers 10 to 150.

Known:

- The sequence of characters to be deleted: weekly

```
change 10 999/ weekly// all
```

EDIT—CKPOINT Subcommand

Use the CKPOINT subcommand to protect input or modifications to a data set during an EDIT session. All changes are placed in a work file (utility data set) created by EDIT and are accessible to you if an abnormal termination occurs. The purpose of this subcommand is to eliminate the need for specifying the SAVE subcommand of EDIT to preserve changes.

EDIT—CKPOINT Subcommand Syntax

```
►►──┬─CKPOINT─┬──┬─────────┬──────────────────────────────────────►◄
    └─CKP─────┘  └─value───┘
```

EDIT—CKPOINT Subcommand Operand

value

specifies the intervals (number of line modifications or input lines) at which a checkpoint is taken. You can use the value operand in one of three ways:

1. By specifying a decimal value from 1 to 9999 to be used as the checkpoint intervals.
2. By specifying a decimal value of zero to terminate interval checkpointing.
3. By not specifying a value, causing a checkpoint to be taken. This can be done even though you have already requested interval checkpointing. Checkpointing does not stop in this case, but continues after reaching the previously set interval value.

A line is considered modified if it is inserted, deleted, or changed. Issuing the CHANGE subcommand repeatedly and specifying the same line is equivalent to modifying the line once the CHANGE subcommand is executed.

EDIT—CKPOINT Subcommand Examples

Example 1

When the CKPOINT subcommand is issued without operands, EDIT ensures that all changes or modifications made up to this point are reflected in the work file. To do this, enter:

```
CKPOINT
```

or

```
CKP
```

Example 2

When the CKPOINT subcommand is issued with an operand value of 1 to 9999, a checkpoint is taken immediately and at requested intervals specified by the operand value until termination. To do this, enter:

```
CKPOINT value
```

or

```
CKP value
```

Example 3

When interval checkpointing is in effect and you want to alter the active value, reissue the CKPOINT subcommand inserting the new value like this:

```
CKPOINT new_value
```

or

```
CKP new_value
```

Example 4

To terminate interval checkpoint, issue the CKPOINT subcommand with a zero value. The entry is:

```
CKPOINT 0
```

or

```
CKP 0
```

EDIT—COPY Subcommand

Use the COPY subcommand of EDIT to copy one or more records that exist in the data set you are editing. The copy operation copies data from a source location to a target location within the same data set and leaves the source data intact. Existing lines in the target area are shifted toward the end of the data set as required to make room for the incoming data. No lines are lost.

The target line cannot be within the source area, with the exception that the target line (the first line of the target area) can overlap the last line of the source area.

On completion of the copy operation, the current line pointer points to the last copied-to line, not to the last line shifted to make room in the target area.

If you cause an attention interruption during the copy operation, the data set may be only partially changed. As a check, list the affected part of the data set before continuing.

If COPY is entered without operands, the line pointed to by the current line pointer is copied into the current-line EDIT-default-increment location.

EDIT—COPY Subcommand Syntax

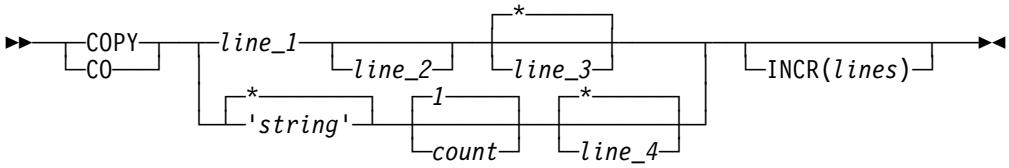

EDIT—COPY Subcommand Operands

line_1
specifies the first line or the lower limit of the range to be copied. If the specified line number does not exist in this data set, the range begins with the next higher line number.

line_2
specifies the last line or the upper limit of the range to be copied. If the specified line number does not exist in this data set, the range ends with the highest line number that is less than *line_2*. If *line_2* is not entered, the value defaults to the value of *line_1*; that is, the source becomes one line. Do not enter an asterisk for *line_2*.

If COPY is followed by two line number operands, the system assumes them to represent *line_1* and *line_3*, and defaults *line_2* to the value of *line_1*.

line_3
specifies the target line number; that is, the line at which the copied-to data area starts. If the *line_3* value corresponds to an existing line, the target line is changed to *line_3* + INCR(*lines*) and either becomes a new line or displaces an existing line at that location. When the copy operation begins, existing lines encountered in the target area are renumbered to make room for the incoming data. The increment for renumbered lines is one (1). Specifying zero (0) for

line_3 puts the copied data at the top of the data set, only if line 0 is empty. If line 0 has data, enter TOP followed by COPY with *line_3* set to *. Note that *line_3* defaults to *.

The value of *line_3* should not fall in the range from *line_1* to *line_2*. The target line must not be in the range being copied. Exception: *Line_3* can be equal to *line_2*.

***** represents the value of the current line pointer.

INCR(*lines***)**
specifies the line number increment to be used for this copy operation. The default is the value in effect for this data before the copy operation. When the copy operation is complete, the increment reverts to the value in effect before COPY was issued. Range: 1-8 decimal digits, but not zero.

The increment for any renumbered lines is one (1).

'*string*'
specifies a sequence of alphanumeric characters with a maximum length equal to or less than the logical record length of the data set you are editing. When a character string is specified, a search starting at the current line is done for the line containing the string. When found, that line is the start of the range to be copied for either numbered or unnumbered data sets.

count
specifies the total number of lines (the range) to be copied. Enter 1-8 decimal digits, but not zero (0) or asterisk (*). The default for *count* depends on what is specified for '*string*' ('*string*' or *). If '*string*' is specified and *count* is left blank, the default for *count* is one (1). For example, if you specify:

```
COPY 'xyz' 99
```

the *count* default is one (1).

However, if you specify an asterisk (*) for the 'string', the next operand is treated as the count operand. For example, if you specify:

```
COPY * 99
```

the count is 99.

line_4
applies to both numbered and unnumbered data sets. For unnumbered data sets, *line_4* specifies the target line (the line at which the copied-to data area starts) as a relative line number (the *n*th line in the data set). For numbered data sets, *line_4* is specified the same as *line_3*. Specifying zero (0) for *line_4* puts the copied data at the top of the data set, only if line (0) is empty. If line (0) has data, enter TOP followed by COPY with *line_4* set to *. The default for *line_4* is *. However, if '*string*' is specified and count is left blank, the operand following '*string*' is treated as the count operand and the *line_4* default (*) is used.

For example, if you specify :

```
COPY 'xyz' 99
```

the count is 99 and *line_4* is *.

EDIT—COPY Subcommand Examples

In the following examples, CLP refers to the current line pointer.

Example 1

Operation: Copy the current line right after itself in a line-numbered data set.

Known:

- Data set contains lines 10 through 120.
- Current line pointer is at 50.
- EDIT provides an increment of 10.

```
Before:                 Enter:                    After:

0010    A               copy     50  50  50       0010    A
0020    BB                                        0020    BB
0030    CCC             or                        0030    CCC
0040    DDDD                                      0040    DDDD
0050    EEEEE           copy     50  50           0050    EEEEE
0060    FFFFFF                            CLP     0060    EEEEE
0070    GGGGGGG         or                        0061    FFFFFF
0080    HHHHHHHH                                  0070    GGGGGGG
0090    IIIIIIIII       copy     50               0080    HHHHHHHH
0100    JJJJJJJJJJ                                0090    IIIIIIIII
0110    KKKKKKKKKKK     or                        0100    JJJJJJJJJJ
0120    LLLLLLLLLLLL                              0110    KKKKKKKKKKK
                        copy                      0120    LLLLLLLLLLLL

                        or

                        copy     'ee'
```

Example 2

Operation: Copy the current line right after itself in an unnumbered data set.

Known:

- Data set contains 12 lines of sequential alphabetic characters.
- Current line pointer is at the seventh line.

```
Before:            Enter:                  After:

A                  copy     *  1  *        A
BB                                         BB
CCC                or                      CCC
DDDD                                       DDDD
EEEEE              copy     *  1           EEEEE
FFFFFF                                     FFFFFF
GGGGGGG            or                      GGGGGGG
HHHHHHHH                            CLP    GGGGGGG
IIIIIIIII          copy     *              HHHHHHHH
JJJJJJJJJJ                                 IIIIIIIII
KKKKKKKKKKK        or                      JJJJJJJJJJ
LLLLLLLLLLLL                               KKKKKKKKKKK
                   copy                    LLLLLLLLLLLL

                   or

                   copy     'gg'
```

Example 3

Operation: Copy a line to a line before it.

Known:

- Data set contains lines 10 through 120.
- Source line is 60.
- Target line is 50.
- EDIT supplies an increment of 10.

```
Before:               Enter:                  After:

0010    A             copy   60  50           0010    A
0020    BB                                    0020    BB
0030    CCC                                   0030    CCC
0040    DDDD                                  0040    DDDD
0050    EEEEE                                 0050    EEEEE
0060    FFFFFF                          CLP   0060    FFFFFF
0070    GGGGGGG                               0061    FFFFFF
0080    HHHHHHHH                              0070    GGGGGGG
0090    IIIIIIIII                             0080    HHHHHHHH
0100    JJJJJJJJJJ                            0090    IIIIIIIII
0110    KKKKKKKKKKK                           0100    JJJJJJJJJJ
0120    LLLLLLLLLLLL                          0110    KKKKKKKKKKK
```

Example 4

Operation: Find the line containing a specific word and copy it to the bottom of the data set.

Known:

- Data set contains nine lines of text.
- Word to be found is men.
- Data set is unnumbered.

```
Before:            Enter:                    After:

NOW IS             top                       NOW IS
THE TIME           copy   'men'  1 99999999  THE TIME
FOR ALL                                      FOR ALL
GOOD MEN                                     GOOD MEN
TO COME                                      TO COME
TO THE                                       TO THE
AID OF                                       AID OF
THEIR                                        THEIR
COUNTRY                                      COUNTRY
                                      CLP    GOOD MEN
```

Example 5

Operation: Copy lines 10, 20, and 30 into a target area starting at line 100, using an increment of 5.

Known:

- Data set contains lines 10 through 120.

```
Before:              Enter:                      After:

0010  A              copy   10  30  100 incr(5)  0010    A
0020  BB                                         0020    BB
0030  CCC            or                          0030    CCC
0040  DDDD                                       0040    DDDD
0050  EEEEE          copy    9  31  100 incr(5)  0050    EEEEE
0060  FFFFFF                                     0060    FFFFFF
0070  GGGGGGG        or                          0070    GGGGGGG
0080  HHHHHHHH                                   0080    HHHHHHHH
0090  IIIIIIIII      copy    1  39  100 incr(5)  0090    IIIIIIIII
0100  JJJJJJJJJJ                                 0100    JJJJJJJJJJ
0110  KKKKKKKKKKK                                0105    A
0120  LLLLLLLLLLLL                               0110    BB
                                            CLP  0115    CCC
                                                 0116    KKKKKKKKKKK
                                                 0120    LLLLLLLLLLLL
```

Example 6

Operation: Copy four lines from a source area to a target area that overlaps the last line of the source, using the default increment.

Known:

- Data set contains lines 10 through 120.
- Source lines are 20 through 50.
- Target area starts at line 50.
- EDIT provides an increment of 10.

```
Before:                Enter:                   After:

0010    A              copy   20  50  50        0010    A
0020    BB                                      0020    BB
0030    CCC                                     0030    CCC
0040    DDDD                                    0040    DDDD
0050    EEEEE                                   0050    EEEEE
0060    FFFFFF                                  0060    BB
0070    GGGGGGG                                 0070    CCC
0080    HHHHHHHH                                0080    DDDD
0090    IIIIIIIII                       CLP     0090    EEEEE
0100    JJJJJJJJJJ                              0091    FFFFFF
0100    KKKKKKKKKKK                             0092    GGGGGGG
0120    LLLLLLLLLLL                             0093    HHHHHHHH
                                                0094    IIIIIIIII
                                                0100    JJJJJJJJJJ
                                                0110    KKKKKKKKKKK
                                                0120    LLLLLLLLLLL
```

Example 7

Operation: Copy five lines into a target area that starts before but overlaps into the source area.

Known:

- Data set contains lines 10-120.
- Source range is line 70-110.
- Target location is line 50.
- Increment is 10.

```
Before:                Enter:                          After:

0010  A              copy   70  110  50  incr(10)  0010    A
0020  BB                                            0020    BB
0030  CCC                                           0030    CCC
0040  DDDD                                          0040    DDDD
0050  EEEEE                                         0050    EEEEE
0060  FFFFFF                                        0060    GGGGGG
0070  GGGGGGG                                       0070    HHHHHHH
0080  HHHHHHHH                                      0080    IIIIIIII
0090  IIIIIIIII                                     0090    JJJJJJJJJ
0100  JJJJJJJJJJ                              CLP   0100    KKKKKKKKKK
0110  KKKKKKKKKKK                                   0101    FFFFFF
0120  LLLLLLLLLLL                                   0102    GGGGGGG
                                                    0103    HHHHHHHH
                                                    0104    IIIIIIIII
                                                    0105    JJJJJJJJJJ
                                                    0110    KKKKKKKKKKK
                                                    0120    LLLLLLLLLLL
```

Example 8

Operation: Copy three lines to the top of the data set at line 0.

Known:

- Data set contains lines 10 through 120.
- Line 0 does not exist.
- Source lines are 80, 90, and 100.

- Target area starts at line 0.

```
Before:                Enter:                        After:

0010  A             top                            0000    HHHHHHHH
0020  BB            copy  80  100 *  incr(50)     0050    IIIIIIIII
0030  CCC                                   CLP   0100    JJJJJJJJJJ
0040  DDDD          or                             0101    A
0050  EEEEE                                        0102    BB
0060  FFFFFF        copy  80  100 0  incr(50)     0103    CCC
0070  GGGGGGG                                      0104    DDDD
0080  HHHHHHHH                                     0105    EEEEE
0090  IIIIIIIII                                    0106    FFFFFF
0100  JJJJJJJJJJ                                   0107    GGGGGGG
0110  KKKKKKKKKKK                                  0108    HHHHHHHH
0120  LLLLLLLLLLLL                                 0109    IIIIIIIII
                                                   0110    JJJJJJJJJJ
                                                   0111    KKKKKKKKKKK
                                                   0120    LLLLLLLLLLLL
```

Example 9

Operation: Copy three lines to the top of the data set at line 0, using an increment of 50.

Known:

- Data set contains lines 0 through 120.
- Line 0 contains data.
- Source lines are 80, 90, and 100.
- Target area starts at line 0.

```
Before:                Enter:                        After:

0000  ZIP            top                            0050    HHHHHHHH
0010  A              copy   80  100 *  incr(50)    0100    IIIIIIIII
0020  BB                                       CLP 0150    JJJJJJJJJJ
0030  CCC            The attempt to copy into      0151    ZIP
0040  DDDD           line 0 gets the target data   0152    A
0050  EEEEE          to the top of the data set,   0153    BB
0060  FFFFFF         but shifts the target line    0154    CCC
0070  GGGGGGG        by the increment value.       0155    DDDD
0080  HHHHHHHH                                     0156    EEEEE
0090  IIIIIIIII                                    0157    FFFFFF
0100  JJJJJJJJJJ                                   0158    GGGGGGG
0110  KKKKKKKKKKK                                  0159    HHHHHHHH
0120  LLLLLLLLLLL                                  0160    IIIIIIIII
                                                   0161    JJJJJJJJJJ
                                                   0162    KKKKKKKKKKK
                                                   0163    LLLLLLLLLLL
                     Note:  An entry of
                     copy   80  100 0 incr(50)
                     produces the results
                     shown at right.  The target   0000    ZIP
                     data is inserted between      0050    HHHHHHHH
                     line 0 and the remainder      0100    IIIIIIIII
                     of the data set.         CLP  0150    JJJJJJJJJJ
                                                   0151    A
                                                   0152    BB
                                                   0153    CCC
                                                   0154    DDDD
                                                   0155    EEEEE
                                                   0156    FFFFFF
                                                   0157    GGGGGGG
                                                   0158    HHHHHHHH
                                                   0159    IIIIIIIII
                                                   0160    JJJJJJJJJJ
                                                   0161    KKKKKKKKKKK
                                                   0162    LLLLLLLLLLL
```

EDIT—DELETE Subcommand

Use the DELETE subcommand to remove one or more records from the data set you are editing.

Upon completion of the delete operation, the current line pointer points to the line that preceded the deleted line. If the first line of the data has been deleted, the current line pointer is set to zero.

EDIT—DELETE Subcommand Syntax

```
                    ┌─*──────────┐
                    │   └─count──┘
►►──┬─DELETE─┬──────┼──────────────────────────────────────────────►◄
    └─DEL────┘      └─line_number_1──┬──────────────┬─
                                      └─line_number_2─┘
```

EDIT—DELETE Subcommand Operands

line_number_1
specifies the line to be deleted or the first line of a range of lines to be deleted.

line_number_2
specifies the last line of a range of lines to be deleted.

***** specifies the first line to be deleted is the line indicated by the current line pointer in the system. If no line is specified, then this is the default.

count
specifies the number of lines to be deleted starting at the location indicated by the preceding operand.

EDIT—DELETE Subcommand Examples

Example 1

Operation: Delete the line being referred to by the current line pointer.

```
delete *
```

or

```
delete
```

or

```
del *
```

or

```
del
```

or

```
*
```

Any of the preceding command combinations or abbreviations cause the deletion of the line referred to currently. The last instance is actually a use of the insert/replace/delete function, not the DELETE subcommand.

Example 2

Operation: Delete a particular line from the data set.

Known:

- The line number: 00004

```
delete 4
```

Leading zeros are not required.

Example 3

Operation: Delete several consecutive lines from the data set.

Known:

- The number of the first line: 18
- The number of the last line: 36

```
delete 18 36
```

Example 4

Operation: Delete several lines from a data set with no line numbers. The current line pointer in the system points to the first line to be deleted.

Known:

- The number of lines to be deleted: 18

```
delete * 18
```

Example 5

Operation: Delete all the lines in a data set.

Known:

- The data set contains less than 100 lines and is not line-numbered.

```
top
delete * 100
```

EDIT—DOWN Subcommand

Use the DOWN subcommand to change the current line pointer so that it points to a line that is closer to the end of the data set.

EDIT—DOWN Subcommand Syntax

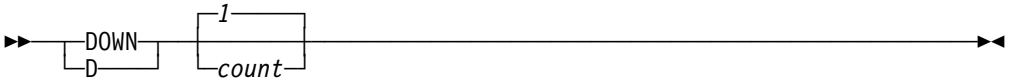

EDIT—DOWN Subcommand Operand

count
: specifies the number of lines toward the end of the data set that you want to move the current line pointer. If you omit this operand, the default is one.

EDIT—DOWN Subcommand Examples

Example 1

Operation: Change the pointer so that it points to the next line.

```
down
```

or

```
d
```

Example 2

Operation: Change the pointer so that you can refer to a line that is located closer to the end of the data set than the line currently pointed to.

Known:

- The number of lines from the present position to the new position: 18

```
down 18
```

or

d 18

EDIT—END Subcommand

Use the END subcommand to terminate the EDIT command. You can use this subcommand with or without the optional operands SAVE or NOSAVE. In either case, the EDIT command terminates processing. If you have modified your data set and have not entered the SAVE subcommand or the SAVE/NOSAVE operand on END, the system asks you if you want to save the data set. If you want to save the data set, reply SAVE. If you do not want to save the data set, reply END.

EDIT—END Subcommand Syntax

```
►►─┬─END─┬──────┬──────────────────────────────────────────►◄
   │     ├─SAVE─┤
   │     └─NOSAVE┘
```

There are no defaults. If you do not specify an operand or SAVE after the last modification, you are prompted by the system.

Regardless of the PROMPT/NOPROMPT option, when END (with no operands) is found in a CLIST, edit mode is terminated. (There is no SAVE processing done for this portion of the session.) If END (with no operands) is found outside a CLIST, you are prompted to enter END or SAVE, regardless of the PROMPT/NOPROMPT option.

EDIT—END Subcommand Operands

SAVE
specifies that the modified data set is to be saved.

NOSAVE
specifies that the modified data set is not to be saved.

EDIT—EXEC Subcommand

Use the EXEC subcommand to execute a CLIST or REXX exec. For a description of the EXEC command syntax and function, see the “EXEC Command” on page 1-142.

Specify only REXX instructions in the REXX exec. Specify only EDIT subcommands and CLIST statements in the CLIST. You cannot specify TSO/E commands in the CLIST or REXX exec *until* you specify END to terminate EDIT.

EDIT—FIND Subcommand

Use the FIND subcommand to locate a specified sequence of characters. The system begins the search at the line referred to by the current line pointer in the system, and continues until the character string is found or the end of the data set is reached.

EDIT—FIND Subcommand Syntax

```
►►──┬FIND──┬──┬──────────────────────────────────────────────────────────►◄
    └F─────┘  └─string──┬──────────────┬──┘
                        └─position─────┘
```

EDIT—FIND Subcommand Operands

If you do not specify any operands, the operands you specified last with FIND are used. The search for the specified string begins at the line following the current line. If you issue the TOP subcommand, the search for the specified string begins with the second line of the data set. Successive use of the FIND subcommand without operands allows you to search a data set, line by line.

string
specifies the sequence of characters (the character string) that you want to locate. You must precede this sequence of characters with an extra character that serves as a special delimiter. The extra character can be any printable character *other* than a number, apostrophe, semicolon, blank, tab, comma, parenthesis, or asterisk. Do not use the extra character in the character string or put a delimiter between the extra character and the string of characters.

Instead of using special delimiters to indicate a character string, you can use paired single quotes (apostrophes) to accomplish the same function with the FIND subcommand. The use of single quotes as delimiters for a character string is called quoted-string notation. Following are the rules for quoted-string notation for the string operand:

1. Enclose a string within single quotes; for example, ‘string character’.
2. Use two single quotes to represent a single quote within a character string; for example, ‘pilgrims's progress’.
3. Use two single quotes to represent a null string; for example, ".

position
specifies the column within each line at which you want the comparison for the string to be made. This operand specifies the starting column of the field to which the string is compared in each line. If you want to consider a string starting in column 6, you must specify the digit 6 for the position operand. For COBOL data sets, the starting column is calculated from the end of the six-digit line number. If you want to consider a string starting in column 8, you must specify the digit 2 for this operand. When you use this operand with the special-delimiter form of notation for string, you must separate it from the string operand with the same special delimiter as the one preceding the string operand.

EDIT—FIND Subcommand Examples

Example 1

Operation: Locate a sequence of characters in a data set.

Known:

- The sequence of characters: ELSE GO TO COUNTER

```
find xelse go to counter
```

Example 2

Operation: Locate a particular instruction in a data set containing an assembler language program.

Known:

- The sequence of characters: LA 3,BREAK
- The instruction begins in column 10.

```
find 'la 3,break ' 10
```

EDIT—FREE Subcommand

Use the FREE subcommand of EDIT to release (deallocate) previously allocated data sets that you no longer need. For a description of the FREE command syntax and function, see the “FREE Command” on page 1-162.

EDIT—HELP Subcommand

Use the HELP subcommand to obtain the syntax and function of EDIT subcommands. For a description of the HELP command syntax and function, see the “HELP Command” on page 1-167.

EDIT—INPUT Subcommand

Use the INPUT subcommand to put the system in input mode so that you can add or replace data in the data set you are editing.

EDIT—INPUT Subcommand Syntax

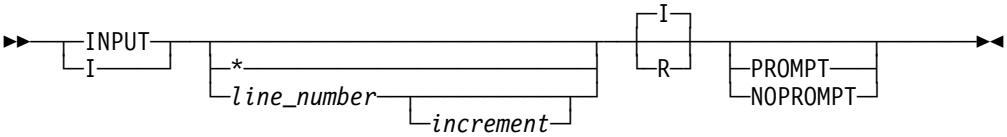

EDIT—INPUT Subcommand Operands

line_number
: specifies the line number and location for the first new line of input. If no operands are specified, input data is added to the end of the data set.

increment
: specifies the amount that you want each succeeding line number to be increased. If you omit this operand, the default is the last increment specified with the INPUT or RENUM subcommand. If neither of these subcommands has been specified with an increment operand, an increment of 10 is used.

*****
: specifies the next new line of input either replaces or follows the line pointed to by the current line pointer, depending on whether you specify the R or I operand. If an increment is specified with this operand, it is ignored.

R
: specifies that you want to replace existing lines of data and insert new lines into the data set. If you fail to specify either a line number or an asterisk, this operand is ignored. If the specified line already exists, the old line is replaced

by the new line. If the specified line is vacant, the new line is inserted at that location. If the increment is greater than 1, all lines between the replacement lines are deleted.

I specifies that you want to insert new lines into the data set without altering existing lines of data. If you fail to specify either a line number or an asterisk, this operand is ignored.

PROMPT | NOPROMPT

PROMPT specifies that you want the system to display either a line number or, if the data set is not line numbered, a prompting character before each new input line. If you omit this operand, the default is:

- The value (either PROMPT or NOPROMPT) that was established the last time you used input mode.
- PROMPT, if this is the first use of input mode and the data set has line numbers.
- NOPROMPT, if this is the first use of input mode and the data set does not have line numbers.

NOPROMPT specifies that you do not want to be prompted.

EDIT—INPUT Subcommand Examples

Example 1

Operation: Add and replace data in an existing data set.

Known:

- The data set is to contain line numbers.
- Prompting is specified.
- The ability to replace lines is specified.
- The first line number: 2
- The increment value for line numbers: 2

```
input 2 2 r prompt
```

The display at your terminal will resemble the following with your input in lowercase and the system's response in uppercase.

```
edit quer cobol old
EDIT
input 2 2 r prompt
INPUT
00002 identification division
00004 program-id.query
00006
```

Example 2

Operation: Insert data in an existing data set.

Known:

- The data set contains text for a report.
- The data set does not have line numbers.
- The ability to replace lines is not necessary.
- The first input data is “New research and development activities will”, which is to be placed at the end of the data set.
- The display at your terminal will resemble the following:

```
edit forecast.text old nonum asis
EDIT
input
INPUT
New research and development activities will
```

EDIT—INSERT Subcommand

Use the INSERT subcommand to insert one or more new lines of data into the data set. Input data is inserted following the location pointed to by the current line pointer in the system. If no operands are specified, input data is placed in the data set line following the current line. You can change the position pointed to by the line pointer by using the BOTTOM, DOWN, TOP, UP, and FIND subcommands.

EDIT—INSERT Subcommand Syntax

```
►►──┬─INSERT─┬──┬──────────────┬──────────────────────────────────►◄
    └─IN─────┘  └─insert_data──┘
```

EDIT—INSERT Subcommand Operand

insert_data

specifies the complete sequence of characters that you want to insert into the data set at the location indicated by the current line pointer. When the first character of the inserted data is a tab, no delimiter is required between the command and the data. Only a single delimiter is recognized by the system. If you enter more than one delimiter, all except the first are considered to be input data.

EDIT—INSERT Subcommand Examples

Example 1

Operation: Insert a single line into a data set.

Known:

- The line to be inserted is:

  ```
  UCBFLG DS AL1 CONTROL FLAGS
  ```

- The data set is not line-numbered.
- The location for the insertion follows the 71st line in the data set.
- The current line pointer points to the 74th line in the data set.
- You are operating in edit mode.

Before entering the INSERT subcommand, the current line pointer must be moved up 3 lines to the location where the new data is inserted:

```
up 3
```

The INSERT subcommand is now entered:

```
INSERT UCBFLG DS AL1 CONTROL FLAGS
```

The display at your terminal shows the following:

```
up 3
insert ucbflg ds al1 control flags
```

Example 2

Operation: Insert several lines into a data set.

Known:

- The data set contains line numbers.
- The inserted lines are to follow line number 00280.
- The current line pointer points to line number 00040.
- You are operating in EDIT mode.
- The lines to be inserted are:

  J.W. HOUSE 13-244831 24.73

  T.N. HOWARD 24-782095 3.05

  B.H. IRELAND 40-007830 104.56

Before entering the INSERT subcommand, the current line pointer must be moved down 24 lines to the location where the new data is inserted:

```
down 24
```

The INSERT subcommand is now entered:

```
insert
```

The system responds with:

```
INPUT
```

The lines to be inserted are now entered.

The display at your terminal shows the following:

```
down 24
insert
INPUT
00281 j.w.house 13-244831 24.73
00282 t.n.howard 24-782095 3.05
00283 b.h.ireland 40-007830 104.56
```

New line numbers are generated in sequence beginning with the number one greater than the one pointed to by the current line pointer. When no line can be inserted, you are notified. No re-sequencing is done by the system.

EDIT—Insert/Replace/Delete Function

The insert/replace/delete function lets you insert, replace, or delete a line of data without specifying a subcommand name. To insert or replace a line, indicate the location and the new data. To delete a line, indicate the location. You can indicate the location by specifying a line number or an asterisk. The asterisk means that the location to be used is pointed to by the line pointer within the system. You can change the line pointer by using the UP, DOWN, TOP, BOTTOM, and FIND subcommands so that the proper line is referred to.

EDIT—Insert/Replace/Delete Function Syntax

```
►►──┬─*──────────┬──┬─────────┬──────────────────────────────────►◄
    └─line_number┘  └─string──┘
```

EDIT—Insert/Replace/Delete Function Operands

line_number
specifies the number of the line you want to insert, replace, or delete.

***** specifies you want to replace or delete the line at the location pointed to by the line pointer in the system. You can use the TOP, BOTTOM, UP, DOWN, and FIND subcommands to change the line pointer without modifying the data set you are editing.

string
specifies the sequence of characters you want to either insert into the data set or to replace an existing line. If this operand is omitted and a line exists at the specified location, the existing line is deleted. When the first character of string is a tab, no delimiter is required between this operand and the preceding operand. Only a single delimiter is recognized by the system. If you enter more than one delimiter, all except the first are considered to be input data.

How the System Interprets the Operands

When you specify only a line number or an asterisk, the system deletes a line of data. When you specify a line number or asterisk followed by a sequence of characters, the system replaces the existing line with the specified sequence of characters or, if there is no existing data at the location, the system inserts the sequence of characters into the data set at the specified location.

EDIT—Insert/Replace/Delete Function Examples

Example 1

Operation: Insert a line into a data set.

Known:

- The number to be assigned to the new line: 62
- The data: (OPEN INPUT PARTS-FILE)

```
62 open input parts-file
```

Example 2

Operation: Replace an existing line in a data set.

Known:

- The number of the line that is to be replaced: 287
- The replacement data: GO TO HOURCOUNT

```
287 go to hourcount
```

Example 3

Operation: Replace an existing line in a data set that does not have line numbers.

Known:

- The line pointer in the system points to the line that is to be replaced.
- The replacement data is: 58 PRINT USING 120,S

```
* 58 print using 120,s
```

Example 4

Operation: Delete an entire line.

Known:

- The number of the line: 98
- The current line pointer in the system points to line 98.

```
98
```

or

```
*
```

EDIT—LIST Subcommand

Use the LIST subcommand to display one or more lines of your data set at your terminal.

If you do not specify any operands with LIST, the entire data set is displayed.

EDIT—LIST Subcommand Syntax

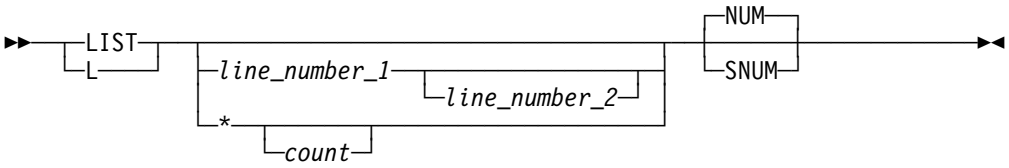

EDIT—LIST Subcommand Operands

line_number_1
: specifies the number of the line that you want to be displayed at your terminal.

line_number_2
: specifies the number of the last line that you want displayed. When you specify this operand, all the lines from *line_number_1* through *line_number_2* are displayed.

***** specifies the line referred to by the current line pointer is to be displayed at your terminal. You can change the line pointer by using the UP, DOWN, TOP, BOTTOM, and FIND subcommands without modifying the data set you are editing.

If the current line pointer is at zero (for example, as a result of a TOP command), and line zero is not already in the data set, the current line pointer moves to the first existing line.

count
specifies the number of lines that you want displayed, starting at the location referred to by the line pointer.

NUM | SNUM

NUM specifies line numbers are to be displayed with the text. If both NUM and SNUM are omitted, NUM is the default. If your data set does not have line numbers, this operand is ignored by the system.

SNUM specifies line numbers are to be suppressed; that is, not displayed at the terminal.

EDIT—LIST Subcommand Examples

Example 1

Operation: List an entire data set.

```
list
```

Example 2

Operation: List part of a data set that has line numbers.

Known:

- The line number of the first line to be displayed: 27
- The line number of the last line to be displayed: 44
- Line numbers are to be included in the list.

```
list 27 44
```

Example 3

Operation: List part of a data set that does not have line numbers.

Known:

- The line pointer in the system points to the first line to be listed.
- The section to be listed consists of 17 lines.

```
list * 17
```

EDIT—MOVE Subcommand

Use the MOVE subcommand of EDIT to move one or more records that exist in the data set you are editing. The move operation moves data from a source location to a target location within the same data set and deletes the source data. Existing lines in the target area are shifted toward the end of the data set as required to make room for the incoming data. No lines are lost in the shift.

The target line cannot be within the source area, with the exception that the target line (the first line of the target area) can overlap the last line of the source area.

Upon completion of the move operation, the current line pointer points to the last moved-to line, not to the last line shifted to make room in the target area.

If you do not specify any operands with MOVE, the MOVE subcommand is ignored.

If you cause an attention interruption during the move operation, the data set might be partially changed. As a check, list the affected part of the data set before continuing.

EDIT—MOVE Subcommand Syntax

```
►►─┬─MOVE─┬─┬─line─┬──────────┬─┬──────┬─┬─────────────────────────────────┬─┬──────────────────┬─►◄
   └─M────┘ │      └─line_2───┘ └─*────┘ │                                 │ └─INCR(lines)──────┘
            │                             │                                 │
            └─┬─*──────────┬─┬─1─────┬─┬─*────┬─┘                           │
              └─'string'───┘ └─count──┘ └─line_4─┘                           │
```

EDIT—MOVE Subcommand Operands

line_1
specifies the first line or the lower limit of the range to be moved. If the specified line number does not exist in this data set, the range begins at the next higher line number.

line_2
specifies the last line or the upper limit of the range to be moved. If the specified line number does not exist in this data set, the range ends with the highest line number that is less than *line_2*. If *line_2* is not entered, the value defaults to the value of *line_1*; that is, the source becomes one line. Do not enter an asterisk for *line_2*.

If MOVE is followed by two line number operands, the system assumes them to represent *line_1* and *line_3*, and defaults *line_2* to the value of *line_1*.

line_3
specifies the target line number; that is, the line at which the moved_to data area will start. If the *line_3* value corresponds to an existing line, the target line is changed to *line_3* + INCR(lines) and either becomes a new line or displaces an existing line at that location. When the move operation begins, existing lines encountered in the target area are renumbered to make room for the incoming data. The increment for renumbered lines is one (1). Specifying zero (0) for *line_3* puts the moved data at the top of the data set, only if line 0 is empty. If line 0 has data, enter TOP followed by MOVE with *line_3* set to *. Note that *line_3* defaults to *.

The value of *line_3* should not fall in the range from *line_1* to *line_2*; that is, the target line must not be in the range being moved. Exception: *Line_3* can be equal to *line_2*.

***** represents the value of the current line pointer.

INCR(*lines***)**
specifies the line number increment to be used for this move operation. The default is the value in effect for this data before the move operation. When the move operation is complete, the increment reverts to the value in effect before MOVE was issued. Range: 1-8 decimal digits, but not zero.

The increment for any renumbered line is one (1).

'*string*'
specifies a string of alphanumeric characters with a maximum length equal to or less than the logical record length of the data set you are editing. When a character string is specified, a search starting at the current line is done for the line containing the string. When found, that line is the start of the range to be moved for either numbered or unnumbered data sets.

count
specifies the total number of lines (the range) to be moved. Enter 1-8 decimal digits, but not zero (0) or asterisk (*). The default for *count* depends on what is specified for '*string*' ('*string*' or *).

If '*string*' is specified and *count* is left blank, the default for *count* is one (1). For example, if you specify:

```
MOVE 'xyz' 99
```

the count default is one (1).

However, if you specify an asterisk (*) for the '*string*', the next operand is treated as the *count* entry. For example, if you specify:

```
MOVE * 99
```

the 99 is treated as the count.

line_4
applies to both numbered and unnumbered data sets. For unnumbered data sets, *line_4* specifies the target line (the line at which the moved-to data area starts) as a relative line number (the 4th line in the data set). For numbered data sets, *line_4* is specified the same as *line_3*. Specifying zero (0) for *line_4* puts the moved data at the top of the data set only if line 0 is empty. If line 0 has data, enter TOP followed by MOVE with *line_4* set to *. The default for *line_4* is *. However, if '*string*' is specified and *count* is left blank, the operand following '*string*' is treated as the *count* operand and the default for *line_4* (*) is used.

For example, if you specify :

```
MOVE 'xyz' 99
```

the count is 99 and *line_4* is *.

EDIT—MOVE Subcommand Examples

In the following examples, CLP refers to the current line pointer.

Example 1

Operation: Move the current line right after itself in a line-numbered data set.

Known:

- Data set contains lines 10 through 120.
- Current line pointer is at 50.
- EDIT provides an increment of 10.

```
Before:              Enter:                  After:

0010   A             move    50  50  50      0010   A
0020   BB                                    0020   BB
0030   CCC           or                      0030   CCC
0040   DDDD                                  0040   DDDD
0050   EEEEE         move    50  50     CLP  0060   EEEEE
0060   FFFFFF                                0061   FFFFFF
0070   GGGGGGG       or                      0070   GGGGGGG
0080   HHHHHHHH                              0080   HHHHHHHH
0090   IIIIIIIII     move    50              0090   IIIIIIIII
0100   JJJJJJJJJJ                            0100   JJJJJJJJJJ
0110   KKKKKKKKKKK   or                      0110   KKKKKKKKKKK
0120   LLLLLLLLLLLL                          0120   LLLLLLLLLLLL
                     move 'ee'
```

Note: MOVE is ignored without operands.

Example 2

Operation: Move the current line right after itself in an unnumbered data set.

Known:

- Data set contains 12 lines of sequential alphabetic characters.
- Current line pointer is at the seventh line.

```
Before:            Enter:                After:

A                  move   *  1  *        A
BB                                       BB
CCC                or                    CCC
DDDD                                     DDDD
EEEEE              move   *  1           EEEEE
FFFFFF                                   FFFFFF
GGGGGGG            or               CLP  GGGGGGG
HHHHHHHH                                 HHHHHHHH
IIIIIIIII          move   *              IIIIIIIII
JJJJJJJJJJ                               JJJJJJJJJJ
KKKKKKKKKKK        or                    KKKKKKKKKKK
LLLLLLLLLLLL                             LLLLLLLLLLLL
                   move 'gg'
```

Note: The effect of the operation is an unchanged data set.

Example 3

Operation: Illustrate an attempt to move a line to a line before it.

Known:

- Data set contains lines 10 through 120.
- Source line is 60.
- Target line is 40.
- EDIT supplies an increment of 10.

```
Before:            Enter:                  After:

0010   A             move 60 60 40         0010   A
0020   BB                                  0020   BB
0030   CCC                                 0030   CCC
0040   DDDD                                0040   DDDD
0050   EEEEE                         CLP   0050   FFFFFF
0060   FFFFFF                              0051   EEEEE
0070   GGGGGGG                             0070   GGGGGGG
0080   HHHHHHHH                            0080   HHHHHHHH
0090   IIIIIIIII                           0090   IIIIIIIII
0100   JJJJJJJJJJ                          0100   JJJJJJJJJJ
0110   KKKKKKKKKKK                         0110   KKKKKKKKKKK
0120   LLLLLLLLLLLL                        0120   LLLLLLLLLLLL
```

Example 4

Operation: Find the line containing a specific word and move it to the bottom of the data set.

Known:

- Data set contains nine lines of text.
- Word to be found is men.
- Data set is unnumbered.

```
Before:            Enter:                  After:

NOW IS             top                     NOW IS
THE TIME           move 'men' 1 99999999   THE TIME
FOR ALL                                    FOR ALL
GOOD MEN                                   TO COME
TO COME                                    TO THE
TO THE                                     AID OF
AID OF                                     THEIR
THEIR                                      COUNTRY
COUNTRY                              CLP   GOOD MEN
```

Example 5

Operation: Move lines 10, 20, and 30 into a target area starting at line 100, using an increment of 5.

Known:

- Data set contains line 10 through 120.

```
Before:              Enter:                        After:

0010   A             move  10  30  100  incr(5)    0040   DDDD
0020   BB                                           0050   EEEEE
0030   CCC           or                             0060   FFFFFF
0040   DDDD                                         0070   GGGGGGG
0050   EEEEE         move   9  31  100  incr(5)    0080   HHHHHHHH
0060   FFFFFF                                       0090   IIIIIIIII
0070   GGGGGGG       or                             0100   JJJJJJJJJJ
0080   HHHHHHHH                                     0105   A
0090   IIIIIIIII     move   1  39  100  incr(5)    0110   BB
0100   JJJJJJJJJJ                             CLP   0115   CCC
0110   KKKKKKKKKKK                                  0116   KKKKKKKKKKK
0120   LLLLLLLLLLL                                  0120   LLLLLLLLLLL
```

Example 6

Operation: Move four lines from a source area to a target area that overlaps the last line of the source, using the default increment.

Known:

- Data set contains lines 10 through 120.
- Source lines are 20 through 50.
- Target area starts at line 50.
- EDIT provides an increment of 10.

```
Before:            Enter:                    After:

0010   A             move   20  50  50       0010   A
0020   BB                                     0060   BB
0030   CCC                                    0070   CCC
0040   DDDD                                   0080   DDDD
0050   EEEEE                            CLP   0090   EEEEE
0060   FFFFFF                                 0091   FFFFFF
0070   GGGGGGG                                0092   GGGGGGG
0080   HHHHHHHH                               0093   HHHHHHHH
0090   IIIIIIIII                              0094   IIIIIIIII
0100   JJJJJJJJJJ                             0100   JJJJJJJJJJ
0110   KKKKKKKKKKK                            0110   KKKKKKKKKKK
0120   LLLLLLLLLLL                            0120   LLLLLLLLLLL
```

Example 7

Operation: Move five lines into a target area that starts before but overlaps into the source area.

Known:

- Data set contains lines 10-120.
- Source range is line 70-110.
- Target location is line 50.
- Increment is to be 10.

```
Before:              Enter:                        After:

0010   A             move  70  110  50  incr(10)   0010   A
0020   BB                                           0020   BB
0030   CCC                                          0030   CCC
0040   DDDD                                         0040   DDDD
0050   EEEEE                                        0050   EEEEE
0060   FFFFFF                                       0060   GGGGGG
0070   GGGGGGG                                      0070   HHHHHHH
0080   HHHHHHHH                                     0080   IIIIIIII
0090   IIIIIIIII                                    0090   JJJJJJJJJ
0100   JJJJJJJJJJ                            CLP    0100   KKKKKKKKKK
0110   KKKKKKKKKKK                                  0101   FFFFFF
0120   LLLLLLLLLLL                                  0120   LLLLLLLLLLL
```

Example 8

Operation: Move three lines to the top of the data set at line 0.

Known:

- Data set contains lines 10 through 120.
- Line 0 doesn't exist.
- Source lines are 80, 90, and 100.
- Target area starts at line 0.

```
Before:              Enter:                        After:

0010   A             top                           0000   HHHHHHHH
0020   BB            move  80  100  *  incr(50)    0050   IIIIIIIII
0030   CCC                                   CLP   0100   JJJJJJJJJJ
0040   DDDD          or                            0101   A
0050   EEEEE                                       0102   BB
0060   FFFFFF        move  80  100  0  incr(50)    0103   CCC
0070   GGGGGGG                                     0104   DDDD
0080   HHHHHHHH                                    0105   EEEEE
0090   IIIIIIIII                                   0106   FFFFFF
0100   JJJJJJJJJJ                                  0107   GGGGGGG
0110   KKKKKKKKKKK                                 0110   KKKKKKKKKKK
0120   LLLLLLLLLLL                                 0120   LLLLLLLLLLL
```

Example 9

Operation: Move three lines to the top of the data set at line 0, using an increment of 50.

Known:

- Data set contains lines 0 through 120.
- Line 0 contains data.
- Source lines are 80, 90, and 100.
- Target area starts at line 0.

```
Before:                Enter:                        After:

0000   ZIP             top                           0050   HHHHHHHH
0010   A               move  80  100  *  incr(50)    0100   IIIIIIIII
0020   BB                                     CLP   0150   JJJJJJJJJJ
0030   CCC             The attempt to move into      0151   ZIP
0040   DDDD            line 0 gets the target data   0152   A
0050   EEEEE           to the top of the data set    0153   BB
0060   FFFFFF          but shifts the target line    0154   CCC
0070   GGGGGGG         by the increment value.       0155   DDDD
0080   HHHHHHHH                                      0156   EEEEE
0090   IIIIIIIII                                     0157   FFFFFF
0100   JJJJJJJJJJ                                    0158   GGGGGGG
0110   KKKKKKKKKKK                                   0159   KKKKKKKKKKK
0120   LLLLLLLLLLL                                   0160   LLLLLLLLLLL
                       Note: An entry of
                       move 80  100  0  incr(50)
                       produces the results
                       shown at right.  The          0000   ZIP
                       target data is inserted       0050   HHHHHHHH
                       between line 0 and the        0100   IIIIIIIII
                       remainder of the data   CLP    0150   JJJJJJJJJJ
                       set.                          0151   A
                                                     0152   BB
                                                     0153   CCC
                                                     0154   DDDD
                                                     0155   EEEEE
                                                     0156   FFFFFF
                                                     0157   GGGGGGG
                                                     0158   KKKKKKKKKKK
                                                     0159   LLLLLLLLLLL
```

EDIT—PROFILE Subcommand

Use the PROFILE subcommand to change the characteristics of your user profile. For a description of the PROFILE command syntax and function, see the “PROFILE Command” on page 1-248.

EDIT—RENUM Subcommand

Use the RENUM subcommand to:

- Assign a line number to each record of a data set that does not have a line number.
- Renumber each record in a data set that has line numbers.

If the data set you are editing contains fixed-length records, new line numbers are placed in the last 8 character positions. There are three exceptions to this general rule:

- Data set type COBOL - first six positions
- Data set type VSBASIC - first five positions
- Data set type ASM and NUM operand specified on EDIT command - positions indicated in NUM operand subfield.

If fixed-length record data sets are being numbered for the first time, any data in the positions indicated above is overlaid.

If you are editing variable-length records without sequence numbers, the records are lengthened so that an eight-digit sequence field (five digits if VSBASIC) is prefixed to each record. You are notified if any records have been truncated in the process. Records are truncated when the data length plus the sequence length exceeds the maximum record length of the data set you are editing.

In all cases, the specified (or default) increment value becomes the line increment for the data set.

EDIT—RENUM Subcommand Syntax

```
►►──┬─RENUM─┬──────────────────────────────────────────────────►
    └─REN───┘

►──┬──────────────────────────────────────────────────────────┬──►◄
   └─new_line_no.──┬──────────────────────────────────────────┬┘
                   └─increment──┬──────────────────────────┬┘
                                └─old_line_no.──┬──────────┬┘
                                                └─end_line_no.─┘
```

EDIT—RENUM Subcommand Operands

new_line_number
: specifies the new line number to be assigned to the first line renumbered. If this operand is omitted, the first line number is 10.

increment
: specifies the amount by which each succeeding line number is to be incremented. The default value is 10. You cannot use this operand unless you specify a new line number.

old_line_number
: specifies the location within the data set where renumbering begins. If this operand is omitted, renumbering starts at the beginning of the data set. You cannot use this operand unless you specify a value for the increment operand or when you are initially numbering a NONUM data set.

end_line_number
: specifies the line number at which renumbering is to end. If this operand is omitted, renumbering continues to the end of the data set. You cannot use this operand without specifying all the other operands.

EDIT—RENUM Subcommand Examples

Example 1

Operation: Renumber an entire data set using the default values for each operand.

```
renum
```

Example 2

Operation: Renumber part of a data set with an increment of 1.

Known:

- The old line number: 17
- The new line number: 21
- The increment: 1

```
ren 21 1 17
```

Example 3

Operation: Renumber part of a data set from which lines have been deleted.

Known:

- Before deletion of the lines, the data set contained lines 10, 20, 30, 40, and 50.
- Lines 20 and 30 were deleted.
- Lines 40 and 50 are to be renumbered with an increment of 10.

```
ren 20 10 40
```

Note: The lowest acceptable value for a new line number in this example is 11.

Example 4

Operation: Renumber a range of lines so that new lines may be inserted.

Known:

- Before renumbering, the data set lines are numbered 10, 20, 23, 26, 29, 30, 40, and 50.
- Two lines are to be inserted after line 29.
- Lines 23-29 are to be renumbered with an increment of 2.
- The first new number to be assigned is 22.

```
ren 22 2 23 29
```

EDIT—RUN Subcommand

Use the RUN subcommand to compile, load, and execute the source statements in the data set that you are editing. The RUN subcommand is designed specifically for use with certain program products. The RUN subcommand selects and invokes the particular program product needed to process your source statements.

Any data sets required by your problem program can be allocated before you enter EDIT mode or can be allocated using the ALLOCATE subcommand.

If you want to enter a value for parameters, you should enter this prior to any of the other keyword operands.

EDIT—RUN Subcommand Syntax

```
►►─┬─RUN─┬─┬─────────────────┬─┬─NOTEST─┬─┬─SMSG─┬─┬─SPREC─┬──────────►
   └─R───┘ └─'parameters'────┘ └─TEST───┘ └─LMSG─┘ └─LPREC──┘

►─┬─OPT───┬─┬──────────────────────────────┬─┬─NOSTORE─┬─┬─GO────┬──────►
  └─CHECK─┘ │                              │ └─STORE───┘ └─NOGO──┘
            └─LIB(──┬─data_set─┬──)────────┘
                    ◄─────────┘

►─┬─────────────────┬─┬─NOPAUSE─┬──────────────────────────────────────►◄
  └─SIZE(value)─────┘ └─PAUSE───┘
```

EDIT—RUN Subcommand Operands

'*parameters*'
specifies a string of up to 100 characters that is passed to the program that is to be executed. You can specify this operand only for programs that accept parameters.

TEST | <u>NOTEST</u>

TEST specifies testing is to be performed during execution. This operand is valid for the VSBASIC program product only.

<u>NOTEST</u> specifies no testing is to be done.

If you omit both TEST and NOTEST, the default value is NOTEST.

LMSG | <u>SMSG</u>

LMSG specifies that you want to receive the longer form of a diagnostic message. This operand is valid for GOFORT statements only.

<u>SMSG</u> specifies that you want to receive the shorter form of a diagnostic message, if there is one. SMSG is the default.

LPREC | <u>SPREC</u>

LPREC specifies long precision arithmetic calculations are to be used. This operand is valid for VSBASIC statements only.

<u>SPREC</u> specifies short precision arithmetic calculations are to be used. SPREC is the default.

CHECK | OPT

CHECK specifies the PL/I Checkout compiler. This operand is valid for the PL/I program product only. If you omit this operand, the OPT operand is the default value for data sets having the PLI descriptive qualifier.

OPT specifies the PL/I Optimizing compiler. This operand is valid for the PL/I program product only.

If both CHECK and OPT are omitted, OPT is the default value for data sets having the PLI descriptive qualifier.

LIB(*data_set*)
specifies the library or libraries that contain subroutines needed by the program you are running. These libraries are concatenated to the default system libraries and passed to the loader for resolution of external references. This operand is valid only for the following data set types: ASM, COBOL, FORTGI, and PLI(Optimizer).

STORE | NOSTORE

STORE specifies a permanent OBJ data set is to be created. The dsname of the OBJ data set is based on the data set name entered on the EDIT command. This operand is valid only for VSBASIC statements.

NOSTORE specifies a permanent OBJ data set is not to be created. This operand is valid only for VSBASIC statements. NOSTORE is the default.

GO | NOGO

GO specifies the compiled program is to be executed. This operand is valid only for VSBASIC statements. GO is the default.

NOGO specifies the compiled program is not to be executed. This operand is valid only for VSBASIC statements.

SIZE(*value*)
specifies the size (1-999) of the area for VSBASIC.

PAUSE | NOPAUSE

PAUSE specifies that you are given the chance to add or change certain compiler options before proceeding to the next chain program. This operand is valid only for VSBASIC statements.

NOPAUSE specifies that you are not to be given the chance to add or change certain compiler options before proceeding to the next chain program. This operand is valid only for VSBASIC statements. NOPAUSE is the default.

EDIT—RUN Subcommand Examples

Example 1

Operation: Execute an assembler language program contained in the data set referred to by the EDIT command.

Known:

- The parameters to be passed to the program are: ‘1024,PAYROLL’

```
run '1024,payroll'
```

Example 2

Operation: Run a FORTRAN IV (GI) program that calls an assembler language output program to maintain bit patterns.

Known:

- The assembler language subroutine in load module form resides in a library called USERID.MYLIB.LOAD.

```
run lib(mylib.load)
```

EDIT—SAVE Subcommand

Use the SAVE subcommand to have your data set retained as a permanent data set. If you use SAVE without an operand, the updated version of your data set replaces the original version. When you specify a new data set name as an operand, both the original version and the updated version of the data set are available for further use.

When you edit a data set with a variable or variable-blocked record format, each record (line) is padded with blanks to the end of the record. When you save the data set, the blanks are eliminated and the length adjusted accordingly.

EDIT—SAVE Subcommand Syntax

```
►►──┬─SAVE─┬──┬──────────────────────────────────────────────────►◄
    └─S────┘  │ ┌─*────────┐ ┌──────────────────────────────────┐
              │ └─dsname───┘ │─RENUM(─┤ Operands ├─)──────────│
              │              │─UNNUM──────────────────────────│
              │              └─REUSE──────────────────────────┘
```

Operands:

```
├──┬──────────────────────────────────────────────────────────────┤
   └─new_line_no.──┬──────────────────────────────────────────────┬──┬
                   │ ┌─10──┐                                      │  │
                   └─┤     ├─incr──┬──────────────────────────────┬┘  │
                     └─────┘       └─old_line_no.──┬──────────────┬┘   │
                                                    └─end_line_no.─┘    │
```

EDIT—SAVE Subcommand Operands

***** specifies the edited version of your data set is to replace the original version. If there are no operands entered on the subcommand, the * is the default.

dsname
specifies a data set name assigned to your edited data set. The new name might be different from the current name. If this operand or an asterisk is omitted, the name entered with the EDIT command is used.

If you specify the name of an existing data set or member of a partitioned data set, that data set or member is replaced by the edited data set. (Before replacement occurs, you are given the option of specifying a new data set name or member name.)

If you do not specify the name of an existing data set or partitioned data set member, a new data set (the edited data set) is created with the name you specified. If you specified a member name for a sequentially organized data set, no replacement of the data set takes place. If you do not specify a member name for an existing partitioned data set, the edited data set is assigned a member name of TEMPNAME.

REUSE | RENUM | UNNUM
These operands cannot be included unless a data set name or an * is specified.

REUSE specifies the data set specified in the *dsname* operand is to be reused, if it already exists. You are not prompted for it.

RENUM specifies the data set is to be renumbered before it is saved.

new_line_number specifies the first line number to be assigned to the data set. If this operand is omitted, the first line number is 10.

incr specifies the amount by which each succeeding line number is to be incremented. The default is 10. This operand cannot be included unless the *new_line_number* is specified.

old_line_number specifies the line location within the data set where the renumber process begins. If this operand is omitted, renumbering starts at the beginning of the data set. The *old_line_number* must be equal to or less than the *new_line_number*. If you specify this operand, then you must also specify INCR.

end_Line_number specifies the line location within the data set where renumbering is to end. If this operand is omitted, renumbering stops at the end of the data set. The *end_line_number* must be greater than the *old_line_number*. This operand cannot be included unless the *old_line_number* is specified.

UNNUM specifies the data set is to be unnumbered before it is saved.

If the data set you are editing originally contained control characters (ASCII or machine), and you enter SAVE without operands, the following actions apply:

- **For Sequential Data Set:** You are warned that the data set is saved without control characters, that is, the record format is changed. Then you are prompted to enter another data set name for SAVE or a null line to reuse the EDIT data set.
- **For Partitioned Data Set:** Saving into the EDIT data set with a control character attribute is not allowed when it is partitioned. You must save into another data set by specifying a data set name on a subsequent SAVE subcommand entry.

EDIT—SAVE Subcommand Examples

Example 1

Operation: Save the data set that has just been edited by the EDIT command.

Known:

- The system is in edit mode. The user-supplied name that you want to give the data set is INDEX.

```
save index
```

Example 2

Operation: Save the data set that has just been edited, renumbering it first.

Known:

- *new_line_number* 100
- increment(INCR) 50

```
save * renum(100 50)
```

EDIT—SCAN Subcommand

Use the SCAN subcommand to request syntax checking services for statements that are processed by the FORTRAN(H) compiler. You can have each statement checked as you enter it in input mode, or any or all existing statements checked. You must explicitly request a check of the syntax of statements you are adding, replacing, or modifying, using the CHANGE subcommand, the INSERT subcommand with the insert data operand, or the insert/replace/delete function.

EDIT—SCAN Subcommand Syntax

```
►►──┬─SCAN─┬──┬─line_number_1──┬──────────────┬──┬─ON──┬──►◄
    └─SC───┘  │                └─line_number_2─┘  │     │
              └─*──────────────────────────────────┘  └─OFF─┘
                  └─count─┘
```

EDIT—SCAN Subcommand Operands

line_number_1
specifies the number of a line to be checked for proper syntax.

line_number_2
specifies all lines between *line_number_1* and *line_number_2* are to be checked for proper syntax.

***** specifies the line at the location indicated by the line pointer in the system is to be checked for proper syntax. The line pointer can be changed by the TOP, BOTTOM, UP, DOWN, and FIND subcommands.

count
specifies the number of lines, beginning with the current line, that you want checked for proper syntax.

ON | OFF

ON specifies each line is to be checked for proper syntax as it is entered in input mode.

OFF specifies each line is not to be checked as it is entered in input mode.

If no operands are specified, all existing statements are checked for proper syntax.

EDIT—SCAN Subcommand Examples

Example 1

Operation: Have each line of a FORTRAN program checked for proper syntax as it is entered.

```
scan on
```

Example 2

Operation: Have all the statements in a data set checked for proper syntax.

```
scan
```

Example 3

Operation: Have several statements checked for proper syntax.

Known:

- The number of the first line to be checked: 62
- The number of the last line to be checked: 69

```
scan 62 69
```

Example 4

Operation: Check several statements for proper syntax.

Known:

- The line pointer points to the first line to be checked.
- The number of lines to be checked: 7

```
scan * 7
```

EDIT—SEND Subcommand

Use the SEND subcommand to send a message to another terminal user or to the system operator. For a description of the SEND command syntax and function, see the “SEND Command” on page 1-276.

EDIT—SUBMIT Subcommand

Use the SUBMIT subcommand of EDIT to submit one or more batch jobs for processing. Each job submitted must reside in either a sequential data set, a direct-access data set, or in a member of a partitioned data set. Submitted data sets must be fixed-blocked, 80 byte records. Using the EDIT command to create a CNTL data set provides the correct format.

Any of these data sets can contain part of a job, one job, or more than one job that can be executed by a single entry of SUBMIT. Each job must comprise an input job stream (JCL plus data). If the characters in these data sets are lowercase, do not submit data sets with descriptive qualifiers TEXT or PLI.

Job cards are optional. The generated jobname is your user ID plus an identifying character. SUBMIT prompts you for the character and inserts the job accounting information from the user's LOGON command on any generated job card. The system or installation default MSGCLASS and CLASS are used for submitted jobs unless MSGCLASS and CLASS are specified on the job card(s) being submitted.

You must be authorized by installation management to use SUBMIT.

EDIT—SUBMIT Subcommand Syntax

```
►►─┬─SUBMIT─┬─┬─*──────────────────────────┬─┬─NOHOLD─┬──────────────────────►
   └─SUB────┘ └─(─┬─data_set─┬─)──────────┘ └─HOLD───┘
                  └──────────┘

►─┬─NOJOBCHAR──────────────┬─┬─PASSWORD───┬─┬─USER(user_id)─┬──────────────►
  └─JOBCHAR(characters)────┘ └─NOPASSWORD─┘ └─NOUSER────────┘

►─┬─NOTIFY───┬──────────────────────────────────────────────────────────►◄
  └─NONOTIFY─┘
```

EDIT—SUBMIT Subcommand Operands

(*data_set***)**
specifies one or more data set name or names of members of partitioned data sets that define an input stream (JCL plus data). If you specify more than one data set name, enclose them in parentheses.

***** specifies the data set you are editing defines the input stream to be submitted. Only the current data set is selected as the input stream. If no operands are entered on the subcommand, the * is the default.

HOLD | <u>NOHOLD</u>

HOLD specifies SUBMIT has job output held for use with the OUTPUT command by defaulting to the held MSGCLASS supplied by the installation manager for the user. If SYSOUT=* or HOLD=YES is specified on the DD statement, then output directed to DD statements is held.

<u>NOHOLD</u> specifies the job output is not to be held. The default is NOHOLD.

JOBCHAR(*characters***) | <u>NOJOBCHAR</u>**

JOBCHAR(*characters***)** specifies characters to be appended to the job name on every JOB statement in the data set being submitted. If you plan to use the STATUS command and your job name is your user ID, use 1 character.

<u>NOJOBCHAR</u> specifies SUBMIT prompts for job name characters whenever the job name is the user ID. If prompting is not possible, the job name character defaults to the letter X. The default is NOJOBCHAR.

PASSWORD | NOPASSWORD

PASSWORD indicates a PASSWORD operand is to be inserted on the generated JOB statement by SUBMIT, if RACF is installed. SUBMIT prompts you to enter the password value (in print inhibit mode, if the terminal supports the feature). This operand is not required if a generated JOB statement or RACF is not installed. If RACF is installed, then PASSWORD is the default. The password used is:

- The password (if executing in the foreground) entered on the LOGON command initiating the foreground session. The current password is

used for RACF-defined users. If you have updated your password using the LOGON command, you must enter the PASSWORD operand with the new password on the SUBMIT command.

- The password on the LOGON command (if executing in the background) in the data set being submitted. If a LOGON command is not in the data set, the USER and PASSWORD operands are not to be included on the generated JOB statement.

NOPASSWORD specifies PASSWORD and USER operands are not included on the generated JOB statement. If RACF is not installed, NOPASSWORD is the default.

USER(*user_id***) | NOUSER**

USER(*user_id***)** specifies a USER operand is to be inserted on the generated JOB statement, if RACF is installed. The user ID specified is also used as the job name for the generated JOB statement and for job name or user ID comparison for NOJOBCHAR processing (see NOJOBCHAR operand description).

If neither USER or NOUSER is entered and RACF is installed, then USER is the default. The default user ID value used is determined by the following rules. The rules are ordered. If the first rule is met, then the user ID is used.

1. The user ID specified on a LOGON command in the data set being submitted.
2. The user ID specified on the LOGON command (if executing in the foreground) initiating the foreground session; the user ID specified on the USER operand (if executing in the background - RACF defined users only) on the JOB statement initiating the background session.
3. The default user ID SUBMITJB is used.

NOUSER specifies generated JOB statements do not include USER and PASSWORD operands. If USER is not specified and RACF is not installed, then NOUSER is the default.

NOTIFY | NONOTIFY

NOTIFY specifies you are to be notified when your job terminates in the background, if a JOB statement has not been provided. If you do not want to receive messages, the message is placed in the broadcast data set. You must then enter LISTBC to receive the message. If a JOB statement is generated, then NOTIFY is the default.

When you supply your own JOB statement, use the NOTIFY=user_id operand on the JOB statement if you want to be notified when the job terminates. SUBMIT ignores the NOTIFY operand unless it is generating a JOB statement.

NONOTIFY specifies a termination message is not to be issued or placed in the broadcast data set. The NONOTIFY operand is only recognized when a JOB statement has not been provided with the job that you are processing.

If any of the above types of data sets containing two or more jobs is submitted for processing, certain conditions apply:

- The SUBMIT processor builds a job card for the first job in the first data set, if none is supplied, but does not build job cards for any other jobs in the data set(s).
- If the SUBMIT processor determines that the first job contains an error, none of the jobs are submitted.
- After the SUBMIT processor submits a job for processing, errors occurring in the execution of that job have no effect on the submission of any remaining job(s) in that data set.

Any job card you supply should have a job name consisting of your user ID and a single identifying character. If the job name is not in this format, you cannot refer to it with the CANCEL command. You are required to specify the job name in the STATUS command if the IBM-supplied exit has not been replaced by your installation and your job name is not your user ID plus a single identifying character.

If you want to provide a job card, but you also want to be prompted for a unique job name character, put your user ID in the job name field and follow it with blanks so that there is room for SUBMIT to insert the prompted-for character. This allows you to change job names without re-editing the JCL data set.

After SUBMIT has successfully submitted a job for batch processing, it issues a ‘jobname(jobid) submitted’ message. The job ID is a unique job identifier assigned by the job entry subsystem (JES).

EDIT—SUBMIT Subcommand Examples

Example 1

Operation: Submit the data set you are editing for batch processing.

Known:

- The data set has no job card and you do not want to be notified when the job is completed.

```
submit * nonotify
```

EDIT—TABSET Subcommand

Use the TABSET subcommand to:

- Establish or change the logical tabulation settings.
- Cancel any existing tabulation settings.

Note: The TABSET subcommand is supported only on terminals that support tab setting.

The basic form of the TABSET subcommand causes each strike of the tab key to be translated into blanks corresponding to the column requirements for the data set type. For example, if the name of the data set you are editing has FORT as a descriptive qualifier, the first tabulation setting is in column 7. The values in Figure 1-14 are in effect when you first enter the EDIT command.

Figure 1-14. Default Tab Settings

Data Set Name Descriptive Qualifier	Default Tab Settings Columns
ASM	10,16,31,72
CLIST	10,20,30,40,50,60
CNTL	10,20,30,40,50,60
COBOL	8,12,72
DATA	10,20,30,40,50,60
FORT FORTRAN(H) compilers, FORTRAN IV (G1) product data set types.	7,72
PLI PL/I Checkout and Optimizing compiler data set types.	5,10,15,20,25,30,35,40,45,50
TEXT	5,10,15,20,30,40
VSBASIC	10,15,20,25,30,35,40,45,50,55
User-defined	10,20,30,40,50,60

You might find it convenient to have the mechanical tab settings coincide with the logical tab settings. Note that, except for line-numbered COBOL or VSBASIC data sets, the logical tab columns apply only to the data that you actually enter. Because a printed line number prompt is not logically part of the data you are entering, the logical tab positions are calculated beginning at the next position after the prompt. Thus, if you are receiving five-digit line number prompts and have set a logical tab in column 10, the mechanical tab should be set 15 columns to the right of the margin. If you are not receiving line number prompts, the mechanical tab should be set 10 columns to the right of the margin.

In COBOL and VSBASIC data sets, the sequence number (line number) is considered to be a logical (as well as physical) part of each record that you enter. For example, if you specify the NONUM operand on the EDIT command while editing a COBOL or VSBASIC data set, the system assumes that column 1 is at the left margin and that you are entering the required sequence numbers in the first six columns for COBOL or the first five columns for VSBASIC. Thus, logical tabs are calculated from the left margin (column 1). In line-numbered COBOL data sets (the NONUM operand was not specified), the column following a line number prompt is considered to be column 7 of your data; the first six columns are occupied by the system-supplied sequence number (line number). In line-numbered VSBASIC data sets, the column following a line number prompt is considered to be column 6 of your data; the first five columns are occupied by the system-supplied sequence number.

EDIT—TABSET Subcommand Syntax

```
                   ┌─ON(──┬──────────┬──)─┐
                   │      └─integer──┘    │
►►──┬─TABSET─┬─────┼──────────────────────┼──────────────────────────────────►◄
    └─TAB────┘     ├─OFF──────────────────┤
                   └─IMAGE────────────────┘
```

EDIT—TABSET Subcommand Operands

ON(*integer_list***)**
specifies tab settings are to be translated into blanks by the system. If you specify ON without an integer list, the existing or default tab settings are used. You can establish new values for tab settings by specifying the numbers of the tab columns as values for the integer list. A maximum of ten values is allowed. ON is the default.

OFF
specifies there is to be no translation of tabulation characters. Each strike of the tab key produces a single blank in the data.

IMAGE
specifies the next input line defines new tabulation settings. The next line that you type should consist of t's, indicating the column positions of the tab settings, and blanks or any other characters except t. Ten is the maximum number of tab settings allowable. Do not use the tab key to produce the new image line. A good practice is to use a sequence of digits between the t's so you can easily determine which columns the tabs are set to (see “Example 3”).

EDIT—TABSET Subcommand Examples

Example 1

Operation: Re-establish standard tab settings for your data set.

Known:

- Tab settings are not in effect.

```
tab
```

Example 2

Operation: Establish tabs for columns 2, 18, and 72.

```
tab on(2 18 72)
```

Example 3

Operation: Establish tabs at every 10th column.

```
tab image
123456789t123456789t123...
```

EDIT—TOP Subcommand

Use the TOP subcommand to change the line pointer in the system to zero, that is, the pointer points to the position preceding the first line of an unnumbered data set or of a numbered data set, which does not have a line number of zero. The pointer points to line number zero of a data set that has one.

This subcommand is useful in setting the line pointer to the proper position for subsequent subcommands that need to start their operations at the beginning of the data set.

If the data set is empty, you are notified. However, the current line pointer still takes on a zero value.

EDIT—TOP Subcommand Syntax

```
►►──TOP──────────────────────────────────────────────────────────►◄
```

EDIT—TOP Subcommand Examples

Example 1

Operation: Move the line pointer to the beginning of your data set.

Known:

- The data set is not line-numbered.

```
top
```

EDIT—UNNUM Subcommand

Use the UNNUM subcommand to remove existing line numbers from the records in the data set.

EDIT—UNNUM Subcommand Syntax

```
►►──┬─UNNUM─┬──────────────────────────────────────────────────────►◄
    └─UNN───┘
```

EDIT—UNNUM Subcommand Examples

Example 1

Operation: Remove the line numbers from an ASM-type data set.

Known:

- The data set has line numbers.

```
unnum
```

EDIT—UP Subcommand

Use the UP subcommand to change the line pointer in the system so that it points to a record nearer the beginning of your data set. If the use of this subcommand causes the line pointer to point to the first record of your data set, you are notified.

EDIT—UP Subcommand Syntax

```
►►──UP──┬─1─────┬──────────────────────────────────────────────────►◄
        └─count─┘
```

EDIT—UP Subcommand Operands

count

specifies the number of lines toward the beginning of the data set that you want to move the current line pointer. If count is omitted, the pointer is moved only one line.

EDIT—UP Subcommand Examples

Example 1

Operation: Change the pointer so that it refers to the preceding line.

```
up
```

Example 2

Operation: Change the pointer so that it refers to a line located 17 lines before the location currently referred to.

```
up 17
```

EDIT—VERIFY Subcommand

Use the VERIFY subcommand to display the line that is currently pointed to by the line pointer in the system whenever the current line pointer has been moved, or whenever a line has been modified by use of the CHANGE subcommand. Until you enter VERIFY, you do not have verification of changes in the position of the current line pointer.

EDIT—VERIFY Subcommand Syntax

```
►►──┬─VERIFY─┬──┬─ON──┬──────────────────────────────────────────►◄
    └─V──────┘  └─OFF─┘
```

EDIT—VERIFY Subcommand Operands

ON

specifies you want to have the line that is referred to by the line pointer displayed at your terminal each time the line pointer changes or each time the line is changed by the CHANGE subcommand. If you omit both ON and OFF, then ON is the default.

OFF

specifies you want to discontinue this service.

If the VERIFY subcommand is activated by BOTTOM, CHANGE, COPY, DELETE, DOWN, FIND, MOVE, RENUM, UNNUM and UP, then subcommands change the current line pointer and cause it to be displayed.

EDIT—VERIFY Subcommand Examples

Example 1

Operation: Have the line that is referred to by the line pointer displayed at your terminal each time the line pointer changes.

```
verify
```

or

```
verify on
```

Example 2

Operation: Terminate the operations of the VERIFY subcommand.

```
verify off
```

END Command

Use the END command to end a CLIST. When the system encounters an END command in a CLIST, and the CONTROL MAIN option is not in effect, CLIST execution halts. If the CONTROL MAIN option is in effect, use the EXIT statement to halt the execution of the CLIST. This function is better performed by the EXIT statement.

END Command Syntax

```
►►──END──────────────────────────────────────────────────────────►◄
```

END Command Return Code

The return code is from the command that executed last.

EXEC Command

Use the EXEC command to execute a CLIST or REXX exec.

You can specify the EXEC command or the EXEC subcommand of EDIT and TEST in three ways:

- **Explicit form:** Enter EXEC or EX followed by the name of the data set that contains the CLIST or REXX exec. If you need prompting you should invoke EXEC explicitly with the PROMPT option.
- **Implicit form:** Do *not* enter EXEC or EX; enter only the name of the member to be found in a procedure library such as SYSEXEC or SYSPROC. A procedure library consists of partitioned data sets allocated to the specific file (SYSPROC or SYSEXEC) either dynamically by the ALLOCATE command or as part of the LOGON procedure. TSO/E determines if the member name is a system command before it searches the libraries.
- **Extended implicit form:** Enter a percent sign followed by the member name. TSO/E only searches the procedure library for the specified name. This form is faster because the system doesn't search for commands.

Some of the commands in a CLIST might have symbolic variables for operands. When you specify the EXEC command, you can supply actual values for the system to use in place of the symbolic variables. In addition, when you invoke a REXX exec you can pass arguments on the EXEC command. Specify the arguments in single quotes.

Using EXEC as a Subcommand

The EXEC subcommand of EDIT and TEST performs the same basic functions as the EXEC command. However, a CLIST that is executed with an EXEC subcommand can execute only CLIST statements and other subcommands of the EDIT or TEST commands. A REXX exec executed with an EXEC subcommand can execute only REXX statements. When used to execute a REXX exec, the EXEC subcommand can use the data stack to provide information to EDIT or TEST. For information on writing CLISTs, see *OS/390 TSO/E CLISTs*. For information on writing REXX execs, see *OS/390 TSO/E REXX User's Guide* and *OS/390 TSO/E REXX Reference*.

EXEC Command Syntax

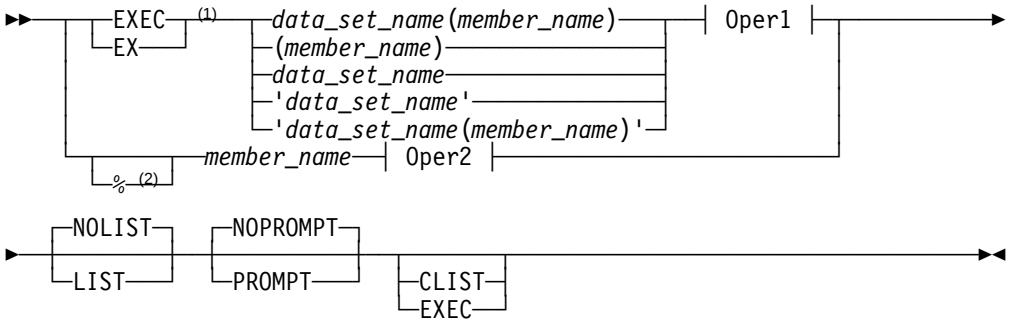

Oper1:

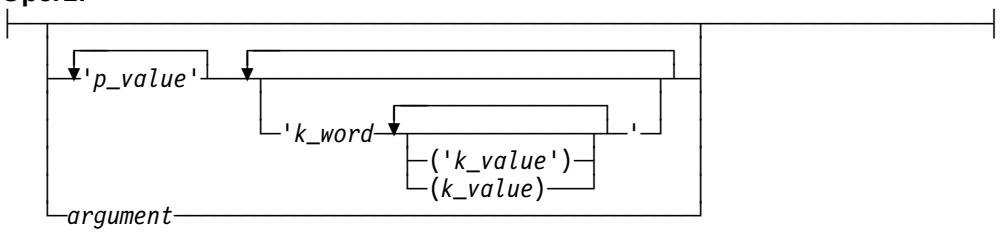

Oper2:

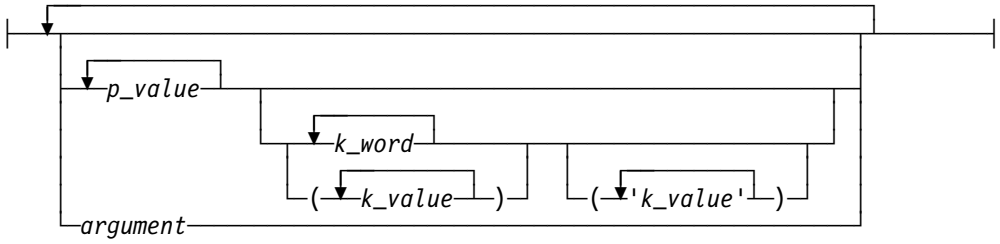

Notes:

1 The explicit form of the EXEC command.

2 The implicit (without percent sign) and extended implicit form (with percent sign).

EXEC Command Operands

*data_set_name***(***member_name***)**
specifies the unqualified name of a partitioned data set whose type is CLIST or exec. The *data_set_name* is the library name such as the name SESSION in the data set PREFIX.SESSION.CLIST.(*member_name*) is the name of the CLIST or exec. For example, to execute `prefix.session.clist(first)`, specify:

```
exec session (first)
```

(*member_name***)**
specifies a member of a partitioned data set whose type is CLIST or exec. (*member_name*) is the name of the CLIST or exec. For example, to execute an exec named `prefix.exec(two)`, specify:

```
exec (two) exec
```

data_set_name
specifies the unqualified name of a sequential data set whose type is CLIST or exec. *Data_set_name* is the name of the CLIST or exec. For example, to execute a CLIST named `prefix.test.clist`, specify:

```
exec test.clist
```

'*data_set_name***'**
specifies the fully-qualified name of a sequential data set. For example, to execute an exec named `project.num.one`, specify:

```
exec 'project.num.one' exec
```

If the data set is not a sequential, but a partitioned one, a member TEMPNAME is assumed. If such member does not exist, the system will notify you, otherwise it will be executed.

'*data_set_name***(***member_name***)'**
specifies the fully-qualified name of a partitioned data set. (*member_name*) is the name of the CLIST or exec. For example, to execute a CLIST named `PROJECT.SPECIAL.$1993(MARCH)`, specify:

```
exec 'PROJECT.SPECIAL.$1993(MARCH)'
```

A CLIST or REXX exec data set may contain line numbers according to the following format:

- Variable blocked — First 8 characters in each record. If the data in columns 1-8 is not numeric, the CLIST or exec treats it as data.
- Fixed blocked — Last 8 characters in each record

Variable blocked records are recommended, although fixed blocked can be used.

p_value
For use with CLISTs only. A *p_value* is the actual value a user specifies for each positional parameter on the PROC statement. Lowercase values are changed to uppercase.

The user must specify a *p_value* for each positional parameter in the same sequence as each appears on the PROC statement (for example, p_value_1 p_value_2 ... p_value_n).

If a user does not specify a *p_value* for a positional parameter, the CLIST prompts for the value. See “Considerations for Passing Quotes” on page 1-150 for more information.

argument
For use with execs only. Specifies a parameter passed to an exec.

k_word
For use with CLISTs only. *k_word* is the actual keyword a user specifies. It can be an abbreviation if it is different from all other *k_word* parameters in the EXEC command.

The specification of *k_word* must follow all *p_value* specifications; but *k_words* may be specified in any order.

k_value
A value associated with a *k_word*.

'*k_value***'**
k_value is a quoted string. Lowercase values are changed to uppercase.

Specification on the PROC statement: keyword()

- If the user specifies *k_word* without a *k_value*, the CLIST prompts for the value.
- If the user does not specify *k_word*, the associated keyword has a null value.

Specification on the PROC statement: keyword(default value)

- If the user specifies *k_word* without a *k_value*, the CLIST prompts for the value.
- If the user does not specify *k_word*, the CLIST uses the default value.
- If the user specifies *k_word* with a *k_value*, the CLIST uses *k_value*.

See “Considerations for Passing Quotes” on page 1-150 for more information.

NOLIST | LIST
specifies whether commands and subcommands are to be listed at the terminal as they are executed.

NOLIST specifies commands and subcommands are not to be listed. The system assumes NOLIST for implicit and explicit EXEC commands. NOLIST is the default.

LIST specifies commands and subcommands are to be listed. This operand is valid only for the explicit form of EXEC.

NOPROMPT | PROMPT

NOPROMPT specifies no prompting during the execution of a CLIST or REXX exec. NOPROMPT is the default.

No prompting is allowed during the execution of a program if the NOPROMPT keyword operand of PROFILE has been specified, even if the PROMPT option of EXEC has been specified.

PROMPT specifies prompting to the terminal is allowed during the execution of a CLIST or REXX exec. The PROMPT keyword implies LIST, unless NOLIST has been explicitly specified. Therefore, all commands and subcommands are listed at the terminal as they are executed. This operand is valid only for the explicit form of EXEC.

The PROMPT keyword is not propagated to nested EXEC commands. If you want to be prompted during execution of the program it invokes, PROMPT must be specified on a nested EXEC command.

The following is a list of options resulting from specific keyword entries:

Keyword specified		Resulting options	
PROMPT		PROMPT	LIST
NOPROMPT		NOPROMPT	NOLIST
LIST		LIST	NOPROMPT
NOLIST		NOLIST	NOPROMPT
PROMPT	LIST	PROMPT	LIST
PROMPT	NOLIST	PROMPT	NOLIST
NOPROMPT	LIST	NOPROMPT	LIST
NOPROMPT	NOLIST	NOPROMPT	NOLIST
No keywords		NOPROMPT	NOLIST

CLIST | EXEC

specifies whether a CLIST or an exec is to be run. To fully qualify the data set name, the EXEC command adds the suffix `CLIST` or `EXEC` to the data set name. For more information about these operands, including what happens when you omit the parameter, see “Using the Explicit Form of the EXEC Command” on page 1-147.

CLIST specifies that a CLIST is to be run.

EXEC specifies that an exec is to be run.

%*member_name*

specifies the name of a CLIST or exec. If the percent sign (%) is entered, TSO/E searches its procedure libraries for a CLIST or exec only. It does not search for a command. For example, to execute an exec named `prefix.myrexx.exec(new)` that is allocated to a procedure library, specify:

```
%new
```

Suppose the following CLIST exists as a data set named ANZAL:

```
PROC 3 INPUT OUTPUT LIST LINES( )
allocate dataset(&input) file(indata) old
allocate dataset(&output) block(100) space(300,100)
allocate dataset(&list) file(print)
call proc2 '&lines'
end
```

The PROC statement indicates that the three symbolic values, &INPUT,; &OUTPUT and &LIST, are positional (required) and that the symbolic value &LINES is a keyword (optional).

To replace ALPHA for INPUT, BETA for OUTPUT, COMMENT for LIST, and 20 for LINES, you would specify the implicit form:

```
anzal alpha beta comment lines(20)
```

Note: If the value of a operand is not entered on the EXEC statement, that value is nullified.

Using the Explicit Form of the EXEC Command

Using the explicit form of the EXEC command involves naming the data set that contains the REXX exec or CLIST. You can create the fully-qualified data set name and determine whether it will run as a REXX exec or a CLIST. You can specify either the CLIST or EXEC operand to denote that the data set be run as a REXX exec or CLIST, respectively. If you specify neither operand, the data set is run based on the following specifications or defaults:

If you know that the procedure being run is a CLIST, you can code the CLIST operand. If you know that the procedure being run is a REXX exec, you can code the EXEC operand. If you do not code the CLIST or EXEC operand on the EXEC command, the EXEC command processor examines line 1 of the procedure for the characters “REXX” within a comment. (The characters “REXX” can be in uppercase, lowercase, or mixed-case.) This is known as the REXX exec identifier. If the EXEC command finds the REXX exec identifier, the EXEC command runs the procedure as a REXX exec. Otherwise, it runs the procedure as a CLIST.

In addition to determining if a procedure is run as a REXX exec or a CLIST, the CLIST and EXEC operands of the EXEC command determine how to name a non-fully-qualified data set. If you specify EXEC, a non-fully-qualified data set name is suffixed with the “exec” qualifier. If you specify CLIST, or if you omit either EXEC or CLIST, a non-fully-qualified name is suffixed with the qualifier “clist”.

The tables that follow show the decision process for a data set that is fully qualified and a data set that is not fully qualified. The outcome of the decision is that the data set will run as either:

- A REXX exec
- A CLIST

Data Set is Fully Qualified

If you specify:	The procedure runs as a:
EXEC	REXX exec
CLIST	CLIST
Neither and REXX ID is present	REXX exec
Neither and REXX ID is not present	CLIST

Data Set Name is Not Fully Qualified

If you specify:	Then TSO/E adds:	The procedure runs as a:
EXEC	TSO/E prefix and EXEC suffix	REXX exec
CLIST	TSO/E prefix and CLIST suffix	CLIST
Neither	TSO/E prefix and CLIST suffix and the REXX ID is present	REXX exec
Neither	TSO/E prefix and CLIST suffix and the REXX ID not present	CLIST

The following examples use the explicit form of the EXEC command and show how the procedure runs in each case.

Example 1

Operation: Name is not fully qualified, EXEC or CLIST keyword is specified.

Result:

- The fully-qualified name is prefixed by the PREFIX and is suffixed by “exec” or “clist”, unless the non-fully-qualified name already has the appropriate suffix.
- Procedure is run as the keyword specifies.

```
ex tools(mem1) exec
```

runs REXX exec “mem1” from: `‘slk27.tools.exec(mem1)’.`

```
ex tools(mem2) clist
```

runs CLIST “mem2” from: `‘slk27.tools.clist(mem2)’.`

```
ex tools.exec(mem1) exec
```

runs REXX exec “mem1” from: `‘slk27.tools.exec(mem1)’.`

No need to add the “exec” suffix because the name already has the appropriate suffix.

```
ex tools.clist(mem2) clist
```

runs CLIST “mem2” from: `‘slk27.tools.clist(mem2)’.`

No need to add the “clist” suffix because the name already has the appropriate suffix.

Example 2

Operation: Name is fully qualified, EXEC or CLIST keyword is specified.

Result:

- Fully-qualified name is as specified
- Procedure is run as the keyword specifies.

```
ex ‘sk127.tools.exec(mem1)’ exec
```

runs REXX exec “mem1” from: `‘slk27.tools.exec(mem1)’`

```
ex ‘sk127.tools.clist(mem2)’ clist
```

runs CLIST “mem2” from: `‘slk27.tools.clist(mem2)’.`

Example 3

Operation: Name is not fully qualified, EXEC or CLIST keyword is not specified.

Result:

- Fully-qualified name is prefixed by the PREFIX, and is suffixed by “clist”, unless the non-fully-qualified name already has the appropriate suffix.
- Procedure is run as a REXX exec if the REXX string is found within a comment in line 1 of the procedure. Otherwise, it is run as a CLIST.

```
ex tools(mem3)
```

runs “mem3” as REXX exec or CLIST depending on what is found in line 1 of procedure “mem3”. Whether or not “mem3” is run as a REXX exec or a CLIST, it is read from: `‘slk27.tools.clist(mem3)’`.

```
ex tools.clist(mem3)
```

runs “mem3” as REXX exec or CLIST depending on what is found in line 1 of procedure “mem3”. Whether or not “mem3” is run as a REXX exec or a CLIST, it is read from: `‘slk27.tools.clist(mem3)’`.

No need to add the “clist” suffix because the name already has the appropriate suffix.

Example 4

Operation: Name is fully qualified, EXEC or CLIST keyword is not specified.

Result:

- Fully-qualified name is as specified.
- Procedure is run as a REXX exec if the string REXX is found within a comment in line 1 of the procedure. Otherwise, it is run as a CLIST.

```
ex ‘slk27.tools exec(mem3)’
```

runs “mem3” as REXX exec or CLIST depending on what is found in line 1 of procedure “mem3”.

Using the (Extended) Implicit Form of the EXEC Command

When using the implicit form of the EXEC command, TSO/E finds the REXX exec or CLIST as follows.

The following table lists the search order of the user-, application-, and system-level libraries. Also shown are the ddnames associated with each library level. These ddnames can be allocated either dynamically by the ALLOCATE command or included as part of a logon procedure.

Figure 1-15. Library Search Order

Search order	Library level		Associated ddname
1.	User	REXX exec	SYSEXEC
2.	User	CLIST	SYSUPROC
3.	Application	REXX exec	Define with FILE or DATASET operand
4.	Application	CLIST	Define with FILE or DATASET operand
5.	System	REXX exec	SYSEXEC (installation can define this ddname)
6.	System	CLIST	SYSPROC

With the defaults that TSO/E provides, and before an ALTLIB command is invoked, TSO/E searches the system EXEC library (default ddname SYSEXEC) first, followed by the system CLIST library (ddname SYSPROC). Note that your system programmer can change this by

- Defining an alternate ddname of SYSEXEC
- Indicating that TSO/E is not to search the system-level exec ddname of SYSEXEC. Then only the system-level CLIST (SYSPROC) is searched.

You can alter the default library search order by using either the ALTLIB command or the EXECUTIL command.

Use EXECUTIL to indicate that the system-level exec ddname is to be searched for the duration of the current REXX language processor environment.
Use ALTLIB to indicate that the system-level exec ddname is to be searched for the duration of the current application. ALTLIB always overrides EXECUTIL within an application.

Use ALTLIB DISPLAY to see which libraries are being searched for.

The following example uses the implicit form of the EXEC command. It shows how the procedure is run. In this example, assume that the TSO/E prefix is ‘slk27’.

Example 1

Operation: Run an implicit procedure.

Result:

- If the implicit procedure was found in the data set allocated to the SYSEXEC file, it is run as a REXX exec.
- If the implicit procedure was found in the data set allocated to the SYSPROC file, it is run as a REXX exec if the string REXX appears in a comment on line 1 of the procedure. Otherwise, it is run as a CLIST.

```
%mem4
```

runs “mem4” as REXX exec, if “mem4” was found in SYSEXEC or runs “mem4” as REXX exec or CLIST, depending on what is found in line 1 of procedure “mem4”, if “mem4” was found in SYSPROC.

Considerations for Passing Quotes

Considerations for specifying parameters that contain single quotes (apostrophes):

- implicit invocation - specify the exact string.
- explicit invocation - specify two apostrophes for each apostrophe within the string. For example, to pass the string “`It's`” specify:

  ```
  It''s
  ```

  To pass the three-parameter string “`It's 2 o'clock`” specify:

  ```
  It''s 2 o''clock
  ```

Considerations for specifying parameters that are quoted strings:

- implicit invocation:
  - *p_value* - specify the exact string. For example, to pass the fully-qualified data set name `'USER33.MASTER.BACKUP'` specify:

    ```
    'user33.master.backup'
    ```

  - *k_word*(`'`*k_value*`'`) - to pass the same fully-qualified data set name as shown in the previous example as a *k_value*, specify:

    ```
    dsn(''''user33.master.backup'''')
    ```

- explicit invocation:

– *p_value* - specify two quotes for each enclosing quote. For example, to pass the fully-qualified data set name `'USER33.MASTER.BACKUP'` specify:

  `'''user33.master.backup'''`

  The outermost set of quotes is required as part of the syntax.

– *k_word*('*k_value*') - to pass the same fully-qualified data set name as shown in the previous example as a *k_value*, specify

  `'dsn(''''''user33.master.backup'''''')'`

  The number of enclosing quotes must be doubled because the entire specification is itself a quoted string.

EXEC Command Return Codes

Figure 1-16. EXEC Command Return Codes

0	Processing successful.
12	Processing unsuccessful.
Other	Return code is from the EXEC command exit routines or from the REXX exec that was executed.

If your installation uses EXEC command exit routines and those routines indicate that the reason code is used as the return code from EXEC, you may receive return codes other than those listed. For more information about reason and return codes from EXEC, see *OS/390 TSO/E Customization*.

EXEC Command Examples

Example 1

Operation: Execute a CLIST using the explicit form of EXEC.

Known:

- The name of the data set that contains the CLIST is SLK27.USER.CLIST(MEMBER)
- The user's TSO/E prefix is SLK27.

```
ex 'slk27.user.clist(member)'
```

Example 2

Operation: Execute a CLIST to invoke the assembler.

Known:

- The name of the data set that contains the CLIST is RBJ21.FASM.CLIST.
- The CLIST consists of:

```
PROC 1 NAME
 free file(sysin,sysprint)
 delete (&name..list,&name..obj)
 allocate dataset(&name...asm) file(sysin) old keep
 allocate dataset(&name..list) file(sysprint) -
  block(132) space(300,100)
 allocate dataset(&name..obj) file(syspunch) block(80) -
  space(100,50)
 allocate file(sysut1) space(3,1) cylinders new delete
 allocate file(sysut2) space(3,1) cylinders new delete
 allocate file(sysut3) space(3,1) cylinders new delete
 allocate file(syslib) da('d82ljp1.tso.macro',
  'sys1.maclib') shr
 call 'sys1.linklib(ifox00)' 'deck,noobj,rent'
 free file(sysut1,sysut2,sysut3,sysin,sysprint, -
  syspunch,syslib)
 allocate file(sysin) da(*)
 allocate file(sysprint) da(*)
```

Note: You can use a period to delimit a symbolic variable. However, follow the first period with another period. The first period is the delimiter that is removed during symbolic substitution of the variable. The second period remains unchanged.

- The module to be assembled is TGETASIS.
- You want to have the names of the commands in the CLIST displayed at your terminal as they are executed.

To execute the CLIST, enter:

```
exec fasm 'tgetasis' list
```

The display at your terminal would be similar to:

```
EX FASM 'TGETASIS' LIST
FREE FILE(SYSIN,SYSPRINT)
DELETE (TGETASIS.LIST,TGETASIS.OBJ)
IDC0550I ENTRY (A) D82LJP1.TGETASIS.LIST DELETED
IDC0550I ENTRY (A) D82LJP1.TGETASIS.OBJ DELETED
ALLOCATE DATASET(TGETASIS.ASM) FILE(SYSIN) OLD KEEP
ALLOCATE DATASET(TGETASIS.LIST) FILE(SYSPRINT)
 BLOCK(132) SPACE(300,100)
ALLOCATE DATASET(TGETASIS.OBJ) FILE(SYSPUNCH)
 BLOCK(80) SPACE(100,50)
ALLOCATE FILE(SYSUT1) SPACE(3,1) CYLINDERS NEW DELETE
ALLOCATE FILE(SYSUT2) SPACE(3,1) CYLINDERS NEW DELETE
ALLOCATE FILE(SYSUT3) SPACE(3,1) CYLINDERS NEW DELETE
ALLOCATE FILE(SYSLIB) DA('D82LJP1.TSO.MACRO',
 'SYS1.MACLIB') SHR
CALL 'SYS1.LINKLIB(IFOX00)' 'DECK,NOOBJ,RENT'
FREE FILE(SYSUT1,SYSUT2,SYSUT3,SYSIN,SYSPRINT,
 SYSPUNCH,SYSLIB)
ALLOCATE FILE(SYSIN) DA(*)
ALLOCATE FILE(SYSPRINT) DA(*)
READY
```

Example 3

Operation: Assume that the CLIST in Example 2 has been stored in a CLIST library, which was allocated to the SYSPROC file ID. Execute the CLIST using the implicit form of EXEC.

Known:

- The name of the member of the partitioned data set
- that contains the CLIST is FASM2.

```
fasm2 tgetasis
```

Example 4

Operation: Enter a fully-qualified data set name as a keyword value in an EXEC command value list.

Known:

- The CLIST named SWITCH is contained in a CLIST library named MASTER.CLIST which is allocated as SYSPROC.
- The CLIST consists of:

  ```
  PROC 0 DSN1() DSN2()
  RENAME &DSN1 TEMPSAVE
  RENAME &DSN2 &DSN1
  RENAME TEMPSAVE &DSN2
  ```

If you have a user ID of USER33 and you want to switch the names of two data sets MASTER.BACKUP and USER33.GOODCOPY, you could invoke the CLIST as follows:

Explicit form:

```
exec 'master.clist(switch)' +
  'dsn1(''''''master.backup'''''') +
  dsn2(goodcopy)'
```

Extended implicit form:

```
%switch dsn1('''master.backup''') dsn2(goodcopy)
```

Note that when you use the implicit form, the specification of quoted strings in the value list is made simpler because the value list itself is not a quoted string.

Example 5

Operation: Execute a REXX exec using the explicit form of EXEC.

Known:

- The name of the data set that contains the REXX exec is LMW18.USER.EXEC(MEMBER)
- The user's TSO/E prefix is LMW18.

```
ex 'lmw18.user.exec(member)' exec
```

Note that the exec operand used in this example is optional. When a fully quoted data set name is specified, the exec operand (or CLIST operand when executing a CLIST) is not required.

Example 6

Operation: Assume that the REXX exec in Example 5 has been stored in a REXX library, which was allocated to the SYSEXEC file ID. Execute the REXX exec using the implicit form of EXEC.

Known:

- The name of the member of the partitioned data set that contains the REXX exec is MEMBER.

```
member
```

Example 7

Operation: Enter a fully-qualified data set name as an argument in an explicitly executed REXX exec.

Known:

- The REXX exec named SWITCH is contained in a REXX library named MASTER.EXEC which is allocated to SYSPROC.
- The REXX exec consists of:

```
PARSE ARG dsn1 dsn2
'RENAME' dsn1 'TEMPSAVE'
'RENAME' dsn2  dsn1
'RENAME TEMPSAVE' dsn2
```

If you have a user ID of USER33 and you want to switch the names of two data sets MASTER.BACKUP and USER33.GOODCOPY, you could invoke the REXX exec as follows:

Explicit form:

```
exec 'master.exec(switch)' '''master.backup'' goodcopy' exec
```

Extended implicit form:

```
%switch 'master.backup' goodcopy
```

Note that when you use the implicit form, the specification of quoted strings in the value list is made simpler because the value list itself is not a quoted string.

Example 8

Operation: Pass an argument string containing values separated by commas to a REXX exec.

Known:

- The REXX exec named GETARG is contained in a REXX library named REXX.EXEC, which is allocated to file SYSEXEC.
- The REXX exec consists of:

```
PARSE ARG A ',' B
SAY 'Value of A is:' A
SAY 'Value of B is:' B
```

Implicit form:

```
GETARG 1,2
```

Extended implicit form:

```
%GETARG 1,2
```

Explicit form:

```
ex 'REXX.EXEC(GETARG)' '1,2'
```

Note: If you wish to pass an argument string that contains values separated by commas and the first value is null (that is, the argument string begins with a comma), then the explicit form must be used.

For example, to pass the argument string “,3” to the GETARG exec, you must specify:

```
ex 'REXX.EXEC(GETARG)' ',3'
```

In this case, GETARG is passed the two character argument string ",3". The PARSE ARG A ',' B instruction parses the argument string to obtain a null value for A, and a value of 3 for B.

If an implicit invocation is used, the leading comma is stripped from the argument string passed to the exec. That is,

```
GETARG ,3
```

results in the 1 character string "3" being passed to the exec.

EXECUTIL Command

The EXECUTIL command is a TSO/E REXX command that lets you change various characteristics that control how an exec executes in the TSO/E address space. You can use EXECUTIL:

- In an exec
- From TSO/E READY mode
- From ISPF - the ISPF command line or ISPF option 6 (enter a TSO/E command or CLIST)
- In a CLIST. You can use EXECUTIL in a CLIST to affect exec processing. However, it has no effect on CLIST processing.

You can also use EXECUTIL with the HI, HT, RT, TS, and TE operands from a program that is written in a high-level programming language by using the TSO/E service facility. From READY mode or ISPF, the HI, HT, and RT operands are not applicable because an exec is not currently executing.

Use EXECUTIL to:

- Specify whether the system exec library, whose default name is SYSEXEC, is to be closed upon completion of the exec or is to remain open
- Start and stop tracing of an exec
- Stop the execution of an exec
- Suppress and resume terminal output from an exec
- Change entries in a function package directory

- Specify whether the system exec library (the default is SYSEXEC) is to be searched in addition to SYSPROC.

Additional Considerations for Using EXECUTIL

- All of the EXECUTIL operands are mutually exclusive, that is, you can only specify one of the operands on the command.
- The HI, HT, RT, TS, and TE operands on the EXECUTIL command are also, by themselves, *immediate commands*. Immediate commands are commands that can be issued from the terminal if an exec is executing and you press the attention interrupt key and enter attention mode. These commands are processed immediately. *OS/390 TSO/E REXX Reference*, describes the immediate commands.
- In general, EXECUTIL works on a language processor environment basis. That is, EXECUTIL only affects the current environment in which EXECUTIL is issued. For example, if you are in split screen in ISPF and issue EXECUTIL TS from the second ISPF screen to start tracing, only execs that are invoked from that ISPF screen are traced. If you invoke an exec from the first ISPF screen, the exec is not traced.

  Using the EXECDD and SEARCHDD operands may affect subsequent language processor environments that are created. *OS/390 TSO/E REXX Reference*, describes the concept of language processor environments and how EXECUTIL EXECDD and EXECUTIL SEARCHDD may affect more than one environment.

EXECUTIL Command Syntax

```
►►──EXECUTIL──┬─EXECDD(──┬─CLOSE───┬─)──────────────────────────────►◄
              │          └─NOCLOSE─┘│
              ├─TS──────────────────┤
              ├─TE──────────────────┤
              ├─HT──────────────────┤
              ├─RT──────────────────┤
              ├─HI──────────────────┤
              ├─┤ RENAME ├──────────┤
              └─SEARCHDD(──┬─NO──┬─)─┘
                           └─YES─┘
```

RENAME:

```
├──RENAME──NAME(function_name)──┬──────────────────────────┬──┬──────────────────────┤
                                └─SYSNAME(sys_name)─┘      └─DD(sys_dd)─┘
```

EXECUTIL Command Operands

EXECDD(CLOSE | NOCLOSE)

Specifies whether the system exec library is to be closed upon completion of the exec.

CLOSE causes the system exec library, whose default name is SYSEXEC, to be closed upon completion of the exec. This condition can be changed by issuing the EXECUTIL EXECDD(NOCLOSE) command.

NOCLOSE causes the system exec library to remain open upon completion of the exec. This is the default condition and can be changed by issuing the EXECUTIL EXECDD(CLOSE) command. The selected option remains in

effect until it is changed by the appropriate EXECUTIL command, or until the current environment is terminated.

The EXECDD operand affects the ddname specified in the LOADDD field in the module name table. The default is SYSEXEC. *OS/390 TSO/E REXX Reference*, describes the module name table in detail.

Any libraries defined using the ALTLIB command are not affected by the EXECDD operand. SYSPROC is also not affected.

Note: Specify EXECDD(CLOSE) or EXECDD(NOCLOSE) before running any execs out of the SYSEXEC file. If you attempt to use EXECDD(CLOSE) or EXECDD(NOCLOSE) after SYSEXEC has been opened, you might not get the desired result because the SYSEXEC file must be closed at the same MVS task level at which it was opened.

TS Use TS (Trace Start) to start tracing execs. Tracing lets you interactively control the execution of an exec and debug problems. For more information about the interactive debug facility, see *OS/390 TSO/E REXX Reference*.

If you issue EXECUTIL TS from READY mode or ISPF, tracing is started for the next exec you invoke. Tracing is then in effect for that exec and any other execs it calls. Tracing stops:

- When the original exec completes
- If one of the invoked execs specifies EXECUTIL TE
- If one of the invoked execs calls a CLIST, which specifies EXECUTIL TE
- If you enter attention mode while an exec is executing and issue the TE immediate command.

If you use EXECUTIL TS in an exec, tracing is started for all execs that are executing. This includes the current exec that contains EXECUTIL TS, any execs it invokes, and any execs that were executing when the current exec was invoked. Tracing remains active until all currently executing execs complete or an exec or CLIST contains EXECUTIL TE.

For example, suppose exec A calls exec B, which then calls exec C. If exec B contains the EXECUTIL TS command, tracing is started for exec B and remains in effect for both exec C and exec A. Tracing stops when exec A completes. However, if one of the execs contains EXECUTIL TE, tracing stops for all of the execs.

If you use EXECUTIL TS in a CLIST, tracing is started for all execs that are executing, that is, for any exec the CLIST invokes or execs that were executing when the CLIST was invoked. Tracing stops when the CLIST and all currently executing execs complete or if an exec or CLIST contains EXECUTIL TE. For example, suppose an exec calls a CLIST and the CLIST contains the EXECUTIL TS command. When control returns to the exec that invoked the CLIST, that exec is traced.

You can use EXECUTIL TS from a program by using the TSO/E service facility. For example, suppose an exec calls a program and the program encounters an error. The program can invoke EXECUTIL TS using the TSO/E service facility to start tracing all execs that are currently executing.

You can also press the attention interrupt key, enter attention mode, and then enter TS to start tracing or TE to stop tracing. *OS/390 TSO/E REXX Reference*, describes the TS and TE immediate commands.

TE Use TE (Trace End) to end tracing execs. The TE operand is not applicable in READY mode because an exec is not currently running. However, if you issued EXECUTIL TS to trace the next exec you invoke and then issued EXECUTIL TE, the next exec you invoke is not traced.

If you use EXECUTIL TE in an exec or CLIST, tracing is ended for all execs that are currently running. This includes execs that were executing when the exec or CLIST was invoked and execs that the exec or CLIST calls. For example, suppose exec A calls CLIST B, which then calls exec C. If tracing was on and CLIST B contains EXECUTIL TE, tracing is stopped and execs C and A are not traced.

You can use EXECUTIL TE from a program by using the TSO/E service facility. For example, suppose tracing has been started and an exec calls a program. The program can invoke EXECUTIL TE using the TSO/E service facility to stop tracing of all execs that are currently executing.

You can also press the attention interrupt key, enter attention mode, and then enter TE to stop tracing. *OS/390 TSO/E REXX Reference*, describes the TE immediate command.

HT

Use HT (Halt Typing) to suppress terminal output generated by an exec. The exec continues executing. HT suppresses any output generated by REXX instructions or functions (for example, the SAY instruction) and REXX informational messages. REXX error messages are still displayed. Normal terminal output resumes when the exec completes. You can also use EXECUTIL RT to resume terminal output.

HT has no effect on CLISTs or commands. If an exec invokes a CLIST and the CLIST generates terminal output, the output is displayed. If an exec invokes a command, the command displays messages.

Use the HT operand in either an exec or CLIST. You can also use EXECUTIL HT from a program by using the TSO/E service facility. If the program invokes EXECUTIL HT, terminal output from all execs that are currently executing is suppressed. EXECUTIL HT is not applicable from READY mode or ISPF because no execs are currently executing.

If you use EXECUTIL HT in an exec, output is suppressed for all execs that are executing. This includes the current exec that contains EXECUTIL HT, any execs the exec invokes, and any execs that were executing when the current exec was invoked. Output is suppressed until all currently executing execs complete or an exec or CLIST contains EXECUTIL RT.

If you use EXECUTIL HT in a CLIST, output is suppressed for all execs that are executing, that is, for any exec the CLIST invokes or execs that were executing when the CLIST was invoked. Terminal output resumes when the CLIST and all currently executing execs complete or if an exec or CLIST contains EXECUTIL RT.

For example, suppose exec A calls CLIST B, which then calls exec C. If the CLIST contains EXECUTIL HT, output is suppressed for both exec A and exec C.

If you use EXECUTIL HT and want to display terminal output using the SAY instruction, you must use EXECUTIL RT before the SAY instruction to resume terminal output.

RT

Use RT (Resume Typing) to resume terminal output that was previously suppressed. Use the RT operand in either an exec or CLIST. You can also use EXECUTIL RT from a program by using the TSO/E service facility. If the program invokes EXECUTIL RT, terminal output from all execs that are currently executing is resumed. EXECUTIL RT is not applicable from READY mode or ISPF because no execs are currently executing.

If you use EXECUTIL RT in an exec or CLIST, typing is resumed for all execs that are executing.

HI Use HI (Halt Interpretation) to halt the interpretation of all execs that are currently running in the language processor environment. From either an exec or a CLIST, EXECUTIL HI halts the interpretation of all execs that are currently running. If an exec calls a CLIST and the CLIST contains EXECUTIL HI, the exec that invoked the CLIST stops processing.

EXECUTIL HI is not applicable from READY mode or ISPF because no execs are currently executing.

You can use EXECUTIL HI from a program by using the TSO/E service facility. If the program invokes EXECUTIL HI, the interpretation of all execs that are currently running is halted.

If an exec enables the halt condition trap and the exec includes the EXECUTIL HI command, the interpretation of the current exec and all execs the current exec invokes is halted. However, any execs that were executing when the current exec was invoked are not halted. These execs continue executing. For example, suppose exec A calls exec B, exec B specifies EXECUTIL HI and also contains a SIGNAL ON HALT instruction (with a HALT: label). When EXECUTIL HI is processed, control is given to the HALT subroutine. When the subroutine completes, exec A continues executing at the statement that follows the call to exec B. For more information about the SIGNAL instruction, see *OS/390 TSO/E REXX Reference*.

RENAME

Use EXECUTIL RENAME to change entries in a function package directory. A function package directory contains information about the functions and subroutines that make up a function package. *OS/390 TSO/E REXX Reference*, describes function packages and a function package directory.

A function package directory contains the following fields for each function and subroutine:

- Function_name -- the name of the external function or subroutine that is used in an exec.
- Addr -- the address, in storage, of the entry point of the function or subroutine code.
- Sys_name -- the name of the entry point in a load module that corresponds to the code that is called for the function or subroutine.
- Sys_dd -- the name of the DD from which the function or subroutine code is loaded.

You can use EXECUTIL RENAME with the SYSNAME and DD operands to change an entry in a function package directory as follows:

- Use the SYSNAME operand to change the *sys_name* of the function or subroutine in the function package directory. When an exec invokes the function or subroutine, the routine with the new *sys_name* is invoked.
- Use EXECUTIL RENAME NAME(*function_name*) without the SYSNAME and DD operands to flag the directory entry as null. This causes the search for the function or subroutine to continue because a null entry is bypassed. The system will then search for a load module and/or an exec. *OS/390 TSO/E REXX Reference*, describes the complete search order.

EXECUTIL RENAME clears the *addr* field in the function package directory to `X'00'`. When you change an entry, the name of the external function or subroutine is not changed, but the code that the function or subroutine invokes is replaced.

You can use EXECUTIL RENAME to change an entry so that different code is used.

NAME(*function_name***)** specifies the name of the external function or subroutine that is used in an exec. This is also the name in the *function_name* field in the directory entry.

SYSNAME(*sys_name***)** specifies the name of the entry point in a load module that corresponds to the package code that is called for the function or subroutine. If SYSNAME is omitted, the *sys_name* field in the package directory is set to blanks.

DD(*sys_dd***)** specifies the name of the DD from which the package code is loaded. If DD is omitted, the *sys_dd* field in the package directory is set to blanks.

SEARCHDD(YES | NO)
specifies whether the system exec library (the default is SYSEXEC) should be searched when execs are implicitly invoked.

YES indicates that the system exec library (SYSEXEC) is searched, and if the exec is not found, SYSPROC is then searched.

NO indicates that SYSPROC only is searched.

EXECUTIL SEARCHDD lets you dynamically change the search order.

Note: EXECUTIL SEARCHDD generally affects the current language processor environment in which it is invoked. If you use EXECUTIL SEARCHDD from TSO/E READY mode, when you invoke ISPF, the new search order may also be in effect for ISPF. This depends on the values your installation uses for the initialization of a language processor environment. For more information about how the search order is defined and how it can be changed, see *OS/390 TSO/E REXX Reference*.

ALTLIB affects how EXECUTIL operates to determine the search order. If you use ALTLIB to indicate that user-level, application-level, or system-level libraries are to be searched, ALTLIB operates on an application basis. For more information, see “ALTLIB Command” on page 1-59.

If you use EXECUTIL SEARCHDD, the new search order remains in effect until you issue EXECUTIL SEARCHDD again, the language processor environment terminates, or you use ALTLIB.

EXECUTIL Command Return Codes

Figure 1-17. EXECUTIL Command Return Codes

0	Processing successful.
12	Processing unsuccessful. An error message has been issued.

EXECUTIL Command Examples

Example 1

Operation: Your installation uses both SYSEXEC and SYSPROC to store execs and CLISTs. All of the execs you work with are stored in SYSEXEC and your CLISTs are stored in SYSPROC. Currently, your system searches SYSEXEC and SYSPROC and you do not use ALTLIB.

You want to work with CLISTs only and do not need to search SYSEXEC. To change the search order and have the system search SYSPROC only, use the following command:

```
EXECUTIL SEARCHDD(NO)
```

Example 2

Operation: You are updating an exec and including a new internal subroutine. You want to trace the subroutine to test for any problems. In your exec, include EXECUTIL TS at the beginning of your subroutine and EXECUTIL TE when the subroutine returns control to the main program. For example:

```
/*  REXX program  */
MAINRTN:
⋮
CALL SUBRTN
EXECUTIL TE
⋮
EXIT
/*  Subroutine follows  */
SUBRTN:
EXECUTIL TS
⋮
RETURN
```

Example 3

Operation: You want to invoke an exec and trace it. The exec does not contain EXECUTIL TS or the TRACE instruction. Instead of editing the exec and including EXECUTIL TS or a TRACE instruction, you can enter the following from READY mode:

```
EXECUTIL TS
```

When you invoke the exec, the exec is traced. When the exec completes executing, tracing is off.

Example 4

Operation: Suppose an external function called PARTIAL is part of a function package. You have written your own function called PARTIAL or a new version of the external function PARTIAL and want to execute your new PARTIAL function instead of the one in the function package. Your new PARTIAL function may be an exec or may be stored in a load module. You must flag the entry for the PARTIAL function in the function package directory as null in order for the search to continue to execute your new PARTIAL function. To flag the PARTIAL entry in the function package directory as null, use the following command:

```
EXECUTIL RENAME NAME(PARTIAL)
```

When you execute the function PARTIAL, the null entry for PARTIAL in the function package directory is bypassed. The system will continue to search for a load module and/or exec that is called PARTIAL.

FREE Command

Use the FREE command to release (deallocate) previously allocated data sets or hierarchical file system (HFS) files that you no longer need. You can also use this command to change the output class of SYSOUT data sets, to delete attribute lists, and to change the data set disposition specified with the ALLOCATE command.

There is a maximum number of data sets that can be allocated to you at any one time. The allowable number must be large enough to accommodate:

- Data sets allocated by the LOGON and ALLOCATE commands
- Data sets allocated dynamically by the system's command processors

The data sets allocated by the LOGON and ALLOCATE commands are not freed automatically. To avoid the possibility of reaching your limit and being denied necessary resources, you should use the FREE command to release these data sets when they are no longer needed.

When a SYSOUT data set is freed, it is immediately available for output processing, either by the job entry subsystem (not-held data sets) or by the OUTPUT command (held data sets).

When you free SYSOUT data sets, you can change their output class to make them available for processing by an output writer, or route them to another user.

When you enter the LOGOFF command, all data sets allocated to you and attribute lists created during the terminal session are freed by the system.

UNALLOC is the alias of FREE and is intended for use under TEST because FREE is an alias for the FREEMAIN subcommand.

Note: Data sets that are dynamically allocated by a command processor are not automatically freed when the command processor terminates. You must explicitly free dynamically allocated data sets.

FREE Command Syntax

```
►►─FREE──┬─ALL──────────────────────────────────────────────────────►
         │  ┌──────────────────────────────────────────────────────┐
         │  │                                                      │
         │  └─┬─ATTRLIST(──┬─attr_list_name──┬──)──────────────────┬┘
         │    │            ▲                 │                     │
         │    │            └─────────────────┘                     │
         │    │  ┌─DSNAME──┬─(──┬─data_set_name──┬──)──────────────┤
         │    │  │         │    ▲                │                 │
         │    │  └─DATASET─┘    └────────────────┘                 │
         │    │  ┌─DDNAME──┬─(──┬─file_name──┬──)──────────────────┤
         │    │  │         │    ▲            │                     │
         │    │  └─FILE────┘    └────────────┘                     │
         │    └─OUTDES(──┬─output_descriptor_name──┬──)────────────┘
         │               ▲                         │
         │               └─────────────────────────┘
►────┬─DEST(station_id)─┬──┬─HOLD───┬──┬─KEEP──────────┬──────────►
     │                  │  └─NOHOLD─┘  ├─DELETE────────┤
     │                  │              ├─CATALOG───────┤
     │                  │              ├─UNCATALOG─────┤
     │                  │              └─SYSOUT(class)─┘
►────┬─SPIN(──┬─UNALLOC─┬──)──┬──────────────────────────────────────►
     │        └─NO──────┘     │
     │                        └─PATH(──┬─/pathname──┬──)──────────────┤
     │                                 ▲            │                 │
     │                                 └────────────┘                 │
►────┬─PATHDISP(──┬─KEEP───┬──)──────────────────────────────────────►◄
     │            └─DELETE─┘                                          │
```

Note: DELETE is the only disposition that is valid for SYSOUT data sets.

FREE Command Operands

ALL
requests deallocation of all dynamically allocated data sets, files, and attribute lists that are not marked in-use.

DSNAME(*data_set_name***) | DATASET(***data_set_name***)**
specifies one or more data set names that identify the data sets that you want to free. The data set name must include the descriptive (rightmost) qualifier and can contain a member name in parentheses. If you omit this operand, you must specify either FILE, DDNAME, or the ATTRLIST operand.

DDNAME(*file_name***) | FILE(***file_name***)**
specifies one or more file names that identify the data sets to be freed. If you omit this operand, you must specify either the DATASET or DSNAME or the ATTRLIST operand.

ATTRLIST(*attr_list_names***)**
specifies the names of one or more attribute lists that you want to delete. If you omit this operand, you must specify either the DATASET or DSNAME or the FILE or DDNAME operand.

DEST(*station_id***)**
specifies a name of a remote workstation to which the SYSOUT data sets are directed when ready for deallocation. The station ID is a 1 to 8 character name. If this operand is omitted on the FREE command for SYSOUT data sets, the data sets are directed to the workstation specified at the time of allocation.

HOLD | NOHOLD

HOLD specifies the data set is to be placed on the HOLD queue. HOLD overrides any HOLD/NOHOLD specification made when the data set was originally allocated and it also overrides the default HOLD/NOHOLD specification associated with the particular SYSOUT class specified.

NOHOLD specifies the data set is not to be placed on the HOLD queue. NOHOLD overrides any HOLD/NOHOLD specification made when the data set was originally allocated and it also overrides the default HOLD/NOHOLD specification associated with the particular SYSOUT class specified.

KEEP | DELETE | CATALOG | UNCATALOG | SYSOUT(*class*)

KEEP specifies the data set is to be retained by the system after it is freed.

DELETE specifies the data set is to be deleted by the system after it is freed. DELETE is not valid for data sets allocated with SHR or for members of a partitioned data set. Only DELETE is valid for SYSOUT data sets.

CATALOG specifies the data set is to be retained by the system in a catalog after it is freed.

UNCATALOG specifies the data set is to be removed from the catalog after it is freed. The data set is still retained by the system.

SYSOUT(*class*) specifies an output class which is represented by a single character. All of the system output (SYSOUT) data sets specified in the DATASET or DSNAME and FILE or DDNAME operands are assigned to this class and placed in the output queue for processing by an output writer. To free a file to SYSOUT, the file must have previously been allocated to SYSOUT.

The changed SYSOUT class characteristics are used in processing the output with the exception of the spool space allocation attribute. The spool space allocation for the SYSOUT data set is unchanged from what was specified at data set allocation time, either through SYSOUT class definition in JES or through the dynamic allocation parameters.

A concatenated data set that was allocated in a LOGON procedure or by the ALLOCATE command can be freed only by entering the ddname on the FILE or DDNAME operand. It can also be freed by entering FREE ALL.

If HOLD, NOHOLD, KEEP, DELETE, CATALOG, and UNCATALOG are not specified, the specification indicated at the time of allocation remains in effect.

OUTDES(*output_descriptor_name*)
specifies a list of output descriptor names, previously defined by the OUTDES command, that are to be freed. Only output descriptors defined by the OUTDES command are freed. You cannot free output descriptors defined in the LOGON procedure.

For more information about the OUTDES command, see the “OUTDES Command” on page 1-210.

SPIN(UNALLOC | NO)
specifies when the system should make the SYSOUT data set available for printing.

UNALLOC specifies that the system should make the SYSOUT data set available for printing immediately after deallocation.

NO specifies that the system should make the SYSOUT data set available for printing at the end of the step.

Notes:

1. If the SPIN keyword is not specified, FREE does not change the SPIN value of the SYSOUT data set.
2. When the SPIN keyword is specified, you must also specify UNALLOC or NO. If you specify a parameter that is not UNALLOC or NO, or the parameter is missing, FREE will prompt you to specify the parameter.
3. The SPIN keyword specified on the FREE command overrides the SPIN keyword specified on the ALLOCATE command.
4. If the SEGMENT keyword is specified on the ALLOCATE command, the system prints the SYSOUT data set regardless of the SPIN specification on either the ALLOCATE command or FREE command.

PATH(/*pathname*)
identifies a hierarchical file system (HFS) file.

A pathname consists of the names of the directories from the root to the file being identified, and then the name of the file. The form is `/name1/name2/.../namen`.

A pathname begins with a slash (/). The system treats any consecutive slashes like a single slash. The pathname can be 2 to 250 characters, including the slash.

Consists of printable characters from `X'40'` to `X'FE'`. Enclose the pathname in apostrophes if it contains a character other than:

```
Upper case letters              Numbers
Special characters (#,$, or @)  Slash (/)
Asterisk (*)                    Plus (+)
Hyphen (-)                      Period (.)
Ampersand (&)
```

A pathname is case sensitive. Thus, `'/usr/joe'` and `/usr/JOE` define two different files.

PATHDISP(<u>KEEP</u> | DELETE)
modifies the disposition of an HFS file as part of DEALLOCATION or FREE processing.

<u>KEEP</u> specifies that the file should be kept after processing.

DELETE specifies that the file should be deleted after processing.

FREE Command Return Codes

Figure 1-18. FREE Command Return Codes

0	Processing successful.
12	One of the following occurred: • Processing unsuccessful. An error message was issued. • The file or data set was deallocated, but the disposition specified on the FREE command was overridden by the disposition of the file or data set. An informational message was issued.

FREE Command Examples

Example 1

Operation: Free a data set by specifying its data set name.

Known:

- The data set name: TOC903.PROGA.LOAD

```
free dataset(proga.load)
```

Example 2

Operation: Free three data sets by specifying their data set names.

Known:

- The data set names: APRIL.PB99CY.ASM, APRIL.FIRSTQTR.DATA, MAY.DESK.MSG

```
free dataset(pb99cy.asm,firstqtr.data,'may.desk.msg')
```

Example 3

Operation: Free five data sets by specifying data set names or data definition names. Change the output class for any SYSOUT data sets being freed.

Known:

- The name of a data set: WIND.MARCH.FORT
- The file names (data definition names) of 4 data sets: SYSUT1 SYSUT3 SYSIN SYSPRINT
- The new output class: B

```
free dataset(march.fort) file(sysut1,sysut3,sysin,+
  sysprint) sysout(b)
```

Example 4

Operation: Delete two attribute lists.

Known:

- The names of the lists: DCBPARMS ATTRIBUT

```
free attrlist(dsbparms attribut)
```

Example 5

Operation: Free all dynamically allocated data sets, files, and attribute lists.

```
free all
```

Example 6

Operation: Free a file and the dynamic output descriptor.

Known:

- The name of the file: SYSPRINT
- The name of the output descriptor: MULTCOPY

```
free file(sysprint) outdes(multcopy)
```

Example 7

Operation: Free a file and make the data set available for printing immediately after deallocation.

Known:

- The name of the file: SYSPRINT

```
free file(sysprint) spin(unalloc)
```

Example 8

Operation: Release an HFS file.

Known:

- The ddname: OUTPUT
- The pathname: `/u/userid/file.dbp`
- The disposition: DELETE

```
free path('/u/userid/file.dbp')                      +
     pathdisp(delete)
```

HELP Command

Use the HELP command or subcommand to obtain information about the function, syntax, and operands of commands and subcommands, and information about certain messages. This reference information is contained within the system and is displayed at your terminal in response to your request for help. By entering the HELP command or subcommand with no operands, you can obtain a list of all the TSO/E commands grouped by function or subcommands of the command you are using.

You cannot use the HELP command to get additional information about CLIST statements.

Note: The HELP command is valid only in READY mode.

Information available through HELP

The scope of available information ranges from general to specific. The HELP command or subcommand with no operands produces a list of valid commands or subcommand and their basic functions. From the list you can select the command or subcommand most applicable to your needs. If you need more information about the selected command or subcommand, you can use HELP again, specifying the selected command or subcommand name as an operand. You then receive:

- A brief description of the function of the command or subcommand
- The format and syntax for the command or subcommand
- A description of each operand

You can obtain information about a command or subcommand only when the system is ready to accept a command or subcommand.

If you do not want to have all of the detailed information, you can request only the portion that you need.

The information about the commands is contained in a cataloged partitioned data set named SYS1.HELP. Information for each command or subcommand is kept in a member of the partitioned data set. The HELP command or subcommand causes the system to select the appropriate member and display its contents at your terminal.

Figure 1-19 on page 1-169 shows the hierarchy of the sets of information available with the HELP command or subcommand. It also shows the form of the command or subcommand necessary to produce any particular set.

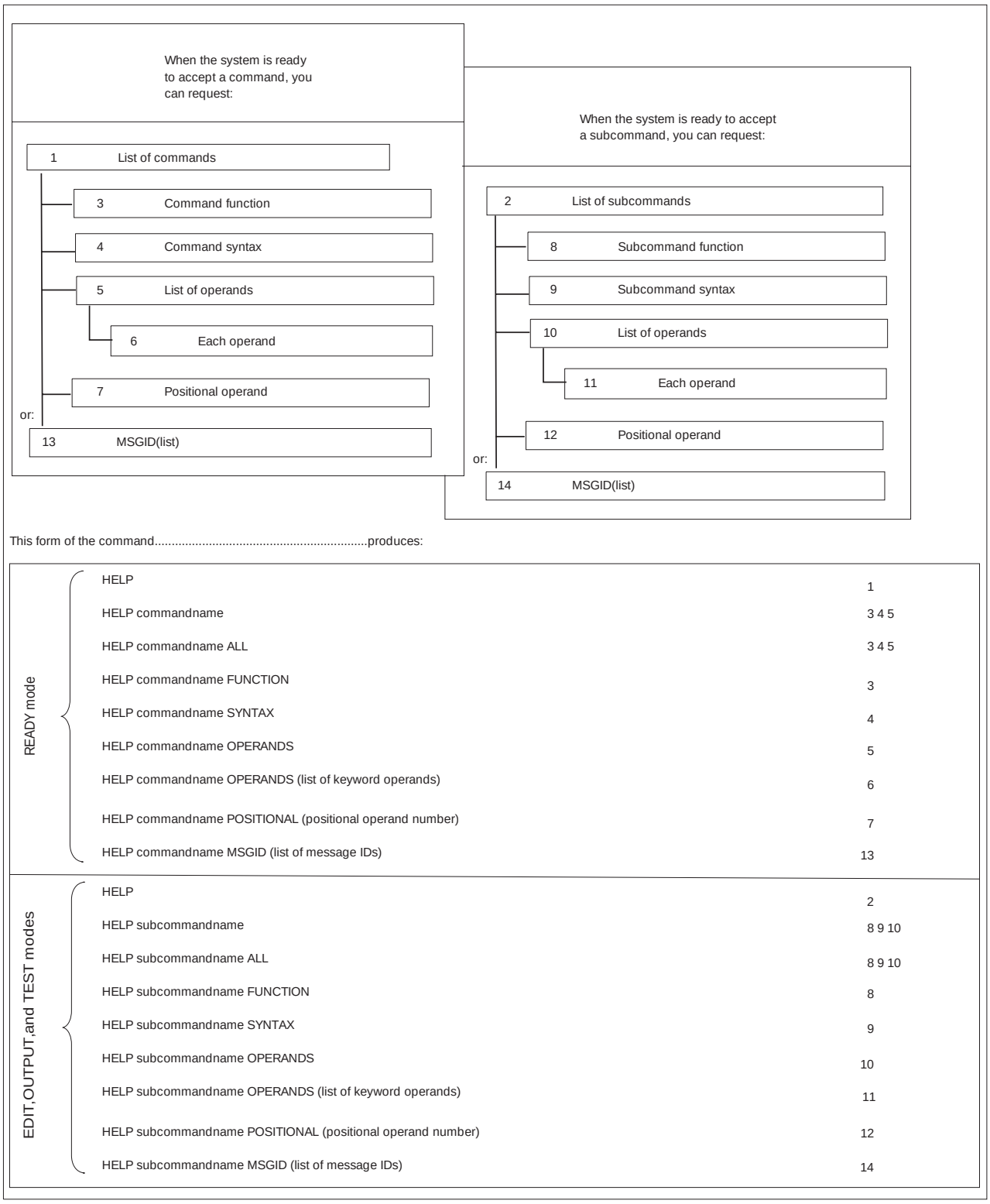

Figure 1-19. Information Available Through the HELP Command

HELP Command Syntax

```
>>─┬─HELP─┬──────────────────────────────────────────────────────────────>
   └─H────┘

>─┬──────────────────────────────────────────────────────────────────────┬─><
  │                          ┌─ALL──────────────────────────────────────┐│
  │┌─command_name──────────┐ │                                          │
  └┴─subcommand_name───────┘─┼─FUNCTION─────────────────────────────────┼┘
                             │─SYNTAX───────────────────────────────────│
                             │─OPERANDS─┬──────────────────────────────┬│
                             │          │┌──────────────────────────┐  │
                             │          └┴─(──┬─operand─┬──────────┬─)─┘│
                             │─POSITIONAL(nn)───────────────────────────│
                             │                ┌──────────────────────┐  │
                             └─MSGID(──┬─identifier─┬──────────────┬─)──┘
```

HELP Command Operands

command_name **|** *subcommand_name*
specifies the name of the command or subcommand that you want to know more about.

FUNCTION
specifies that you want to know more about the purpose and operation of the command or subcommand.

SYNTAX
specifies you want to know more about the syntax required to use the command or subcommand properly.

OPERANDS(*operand***)**
specifies you want to see explanations of the operands for the command or subcommand. When you specify the keyword OPERANDS and omit any values, all operands are described. You can specify particular keyword operands that you want to have described by including them as values within parentheses following the keyword. If you specify a list of more than one operand, the operands in the list must be separated by commas or blanks.

For best results, do not enter abbreviations as *operand*. HELP does not use aliases, as opposed to TSO/E commands. For example, DA is a valid alias for the DATASET operand of the ALLOCATE command, but is ambiguous if used as HELP ALLOCATE OPERANDS(DA). Therefore, specify the full operand as in HELP ALLOCATE OPERANDS(DATASET).

POSITIONAL(*nn***)**
specifies that you want to obtain information on a particular positional operand of the command or subcommand. You can specify the positional operand that you want described by the number (*nn*) of the operand in the sequence of positional operands. The first positional operand would be identified as ‘1’, the second as ‘2’, and so on. You can obtain information on the positional operands of the following commands and any of their subcommands:

- ACCOUNT
- ATTRIB
- CALL
- CANCEL
- EDIT
- EXEC

- HELP
- LOGON
- MVSSERV
- OUTPUT
- RUN
- SEND
- TEST
- TRANSMIT.

ALL
specifies you want to see all information available concerning the command or subcommand. If no other keyword operand is specified, then ALL is the default.

MSGID(*list*)
specifies you want to get additional information about MVSSERV, VSBASIC, TRANSMIT, or RECEIVE messages whose message identifiers are given in the list. Information includes what caused the error and how to prevent a recurrence. You cannot specify the FUNCTION, SYNTAX, OPERANDS, or ALL operands with MSGID.

HELP Command Return Codes

Figure 1-20. HELP Command Return Codes

0	Processing successful.
12	Processing unsuccessful.

HELP Command Examples

Example 1
Operation: Obtain a list of all available commands.

```
help
```

Example 2
Operation: Obtain all the information available for the ALLOCATE command.

```
help allocate
```

Example 3
Operation: Have a description of the XREF, MAP, COBLIB, and OVLY operands for the LINK command displayed at your terminal.

```
h link operands(xref,map,coblib,ovly)
```

Example 4
Operation: Have a description of the function and syntax of the LISTBC command displayed at your terminal.

```
h listbc function syntax
```

Example 5

Operation: Obtain information on the ATTRIB command positional operand.

```
help attrib positional(1)
```

Example 6

Operation: Obtain information on the third positional operand of the RENUM subcommand of EDIT.

```
help renum positional(3)
```

LINK Command

Use the LINK command to invoke the binder or linkage editor service programs. The binder and linkage editor convert one or more object modules (the output modules from compilers) into a load module or program object suitable for execution. In doing this, the binder and linkage editor change all symbolic addresses in the object modules into relative addresses.

The binder and linkage editor provide a great deal of information to help you test and debug a program. This information includes a cross-reference table and a map of the module that identifies the location of control sections, entry points, and addresses. You can have this information listed at your terminal or saved in a data set.

You can change binder defaults. The changes replace the defaults for the LINK command. For more information on changing binder defaults, see *DFSMS/MVS Program Management*.

You might want to use the LOADGO command as an alternative to the LINK command, if:

- The module that you want to process has a simple structure; that is, it is self-contained and does not pass control to other modules.
- You do not require the extensive listings produced by the binder or linkage editor.
- You do not want a load module or program object saved in a library.

LINK Command Syntax

```
►►─LINK(─┬─dataset─┬─)─┬──────────────────────────────────────►
         └─────────┘   │ ┌──────────────────────────┐
                       └─LOAD─┬──────────────────────┬─┘
                              └─(data_set_name)──────┘
```

```
►─┬─NOPRINT──────────────────────┬──┬──────────────────────────────┬──┬─BINDER──────┬──►
  │                              │  │                              │  │             │
  └─PRINT(─┬─*──────────────────┬─)─┘  └─AMODE(─┬─24──────────┬─)─┘  └─NOBINDER───┘
           └─data_set_name──────┘               ├─31──────────┤
                                                ├─ANY─────────┤
                                                └─MIN─────────┘

►─┬─CALL──────┬──┬──────────────────────────┬──┬──────────────────────────────────────┬──►
  │           │  │                          │  │                                      │
  ├─NCAL──────┤  └─CASE(─┬─UPPER─────────┬─)─┘  └─COMPAT(─┬─PM3───────────────────┬─)─┘
  └─NONCAL────┘          └─MIXED─────────┘               ├─PM2───────────────────┤
                                                         ├─PM1───────────────────┤
                                                         ├─LKED──────────────────┤
                                                         ├─CURRENT───────────────┤
                                                         └─CURR──────────────────┘

►─┬─FILL(fill_byte)─┬──┬──────────────────────────┬──►
  │                 │  │                          │
  └─────────────────┘  └─HOBSET(─┬─NO────────┬─)─┘
                                 └─YES───────┘

►─┬──────────────────────────────────────────────────────────┬──┬──────────────────────┬──►
  │                                                          │  │                      │
  └─FETCHOPT(─┬─NOPACK─┬─┬─,NOPRIME─┬─)─┘  └─RMODE(─┬─24──────┬─)─┘
              └─PACK───┘ └─,PRIME───┘               ├─ANY─────┤
                                                    └─SPLIT───┘

►─┬──────────────────────────────────────────────┬──┬──────────────────────────────────►
  │                                              │  │                                  │
  └─LIB(─┬─data_set─┬─)─┘  ┌─PLILIB──┐  ┌─NOMAP─┬─┘
         ◄──────────┘      ├─PLICMIX─┤  └─MAP───┘
                           ├─PLIBASE─┤
                           ├─FORTLIB─┤
                           └─COBLIB──┘

►─┬─NOLET──────────┬──┬─NOXCAL─┬──┬─NOXREF─┬──┬─NOREUS─┬──►
  │                │  │        │  │        │  │        │
  ├─LET───────────┤  └─XCAL───┘  └─XREF───┘  └─REUS───┘
  └─LET(─┬─0──┬─)─┘
         ├─4──┤
         ├─8──┤
         └─12─┘

►─┬──────────────────────────────────────────┬──┬─LIST(SUMMARY)──────────────┬──►
  │                                          │  │                            │
  └─LINECT(─┬─60──────────┬─)─┘  ├─LIST(─┬─OFF──┬─)─┤
            └─line_count──┘               │      ├─STMT─┤
                                          │      └─ALL──┘
                                          └─NOLIST─────────────────────────────┘
```

```
►──┬──────────────────────────────────────────────────────────────────────────────────────────────────────────────────────────────►
   │ MSGLEVEL(┬──0──┬)│   └MAXBLK(integer)┘
   │          ├──4──┤
   │          ├──8──┤
   │          └─12──┘
►──┬──────────────────────────────────────────────────────────────────────────────────────────────────────────────────────────────►
   └WKSPACE(┬──────────┬──────────────────────)┘   └SSI(ssi_word)┘
            └value1────┘  └,value2──────────┘

   ┬─NOSTORENX──────┬   ┬─NOREFR─┬   ┬─NOSCTR─┬   ┬─NOOVLY─┬   ┬─NORENT─┬
   │ └STORENX(NO)───┘   │        │   │        │   │        │   │        │
►──┤                    ├────────┤───┤────────┤───┤────────┤───┤────────┤──►
   └STORENX─────────────┘ └REFR───┘   └SCTR───┘   └OVLY───┘   └RENT───┘

                                                   ┬─NONE─┬   ┬─NOOL─┬   ┬─NODC─┬
►──┬──────────────────────────────────────────────┤      │───┤      │───┤      │──►
   └SIZE(integer_1 integer_2)┘                     └NE────┘   └OL────┘   └DC────┘

   ┬─NOTEST─┬   ┬─NOHIAR─┬   ┬─NOTERM─┬
   │        │   │        │   │        │
►──┤        ├───┤        ├───┤        ├──────────────────────────────────────►
   └TEST────┘   └HIAR────┘   └TERM────┘   └DCBS(block_size)┘

►──┬──────────────────────────────────────────────────────────────────────────►◄
   └AC(authorization_code)┘
```

LINK Command Operands

data_set

specifies the names of one or more data sets containing your object modules. The specified data sets are concatenated within the output load module in the sequence that they are included in this operand. If there is only a single name in the *data_set* list, parentheses are not required unless the single name is a member name of a partitioned data set; then, two pairs of parentheses are required, as in:

```
link((parts))
```

You can substitute an asterisk (*) for a data set name to indicate that you can enter control statements from your terminal. The system prompts you to enter the control statements. A null line indicates the end of your control statements.

LOAD(*data_set_name***)**

specifies the name of the partitioned data set that contains or will contain the load module after processing by the linkage editor. If you omit this operand, the system generates a name according to the data set naming conventions.

PRINT(*data_set_name* **| *)**

specifies linkage editor listings are to be produced and placed in the specified data set. When you omit the data set name, the data set that is generated is named according to the data set naming conventions. If you specify LIST, MAP, or XREF operand, then PRINT is the default. If you want to have the listings displayed at your terminal, you can substitute an asterisk (*) for the data set name.

NOPRINT

specifies no linkage editor listings are to be produced. This operand causes the MAP, XREF, and LIST options to become incorrect. If both PRINT and NOPRINT are omitted and you do not use the LIST, MAP, or XREF operand, then NOPRINT is the default.

AMODE(24 | 31 | ANY | MIN)

specifies the addressing mode for all entry points for the module to be link-edited or bound. For more information on defaulting AMODE see *DFSMS/MVS Program Management*.

Valid AMODE values are:

24 to indicate the module is to be invoked in 24-bit addressing mode

31 to indicate the module is to be invoked in 31-bit addressing mode

ANY to indicate the module is to be invoked in the addressing mode of the caller

MIN causes the binder to set the AMODE to the most restrictive AMODE of all control sections in the module. In this respect, 24 is more restrictive than 31, which is more restrictive than ANY.

The MIN keyword is used only to control binder processing. It assists the binder in determining the resultant AMODE of the module. However, MIN is never used as an AMODE itself and will not appear in the directory entry of the resultant load module or program object. MIN only has meaning when specified for PDSEs on a system with DFSMS/MVS V1R1 or later installed.

BINDER | NOBINDER

BINDER specifies that MVS use binder services for this load module or object module rather than the linkage editor service program. The binder can be used for load modules stored in a PDS as well as program objects in a PDSE. BINDER is the default.

NOBINDER specifies that MVS not use binder services for this object module; the linkage editor service program is used to convert the object module(s) into load module(s). NOBINDER only has meaning when specified on a system with DFSMS/MVS V1R1 or later installed and is ignored by the LINK command on earlier releases of DFP.

CALL | NCAL | NONCAL

CALL specifies that the automatic call mechanism is to be used to bring in additional modules for unresolved external references. CALL is the default.

NCAL | NONCAL specifies that the automatic call mechanism is not to be used for unresolved external references.

CASE(UPPER | MIXED)

UPPER specifies that the binder translates to uppercase all lowercase names found in input modules, control statements, and LINK parameters. UPPER is the default.

MIXED specifies that the binder respect uppercase and lowercase names found in input modules, control statements, and LINK parameters, and treat two strings differently if a character in one string is a different case than the corresponding character in the second string. Binder keywords are always translated to uppercase.

COMPAT(PM3 | PM2 | PM1 | LKED| CURR | CURRENT)
specifies binder compatibility level.

PM3 specifies that the binder create a PM3-level program object. PM3 is the default.

PM2 specifies that the binder create a PM2-level program object.

PM1 specifies that the binder create a PM1-level program object or load module.

LKED specifies that the binder process certain options, such as AMODE/RMODE and REUSability, in a manner compatible with the linkage editor.

CURRENT will instruct the binder to set COMPAT on the currently highest value. For DFSMS 1.4.0 PM3 is the highest level.

CURR is the abbreviation of CURRENT and has the same specification.

FILL*(fill_byte)*
specifies to the binder the byte value to be used to initialize storage areas in the program object. The *(fill_byte)* must be a two hexadecimal digit in the range of 0 — F.

HOBSET(NO | YES)

NO specifies that the binder NOT set the high-order bit (HOB) in V-type adcons according to the AMODE of the target entry point. NO is the default.

YES specifies that the binder set the high-order bit (HOB) in V-type adcons according to the AMODE of the target entry point.

FETCHOPT(PACK | NOPACK, PRIME | NOPRIME)
allows control over how the module is loaded. The PACK and PRIME suboperands indicate whether the load module:

- is page-mapped into virtual storage at load time
- is moved into virtual storage at load time
- converts all addresses from symbolic addresses to relative addresses before the program receives control.

Both suboperands are required for PDSEs; however, (PACK,NOPRIME) is a non-supported combination. FETCHOPT only has meaning when specified for PDSEs on a system with DFSMS/MVS V1R1 or later installed. (NOPACK,NOPRIME) is the default.

PACK specifies that the program object will be page-mapped into temporary storage, then moved into the appropriate MVS subpool. If PACK is specified, PRIME must also be specified.

A PACKed module requires a smaller amount of the user's virtual storage, but it might require more time to load. PACKed modules are aligned on doubleword boundaries.

NOPACK specifies that the module is page-mapped directly into the appropriate MVS subpool. It permits the loading and relocation of only a subset of program pages, before passing control to the loaded program. The remainder of the program is loaded incrementally as page faults occur.

PRIME specifies that all module address constants are converted from relative addresses to virtual addresses before program execution. The loader loads the module into storage and converts all addresses before passing control to the loaded program.

NOPRIME specifies that addresses are not converted until they are needed, and conversion is only performed during page fault processing on text pages. NOPRIME is the default.

RMODE(24 | ANY | SPLIT)
specifies the residence mode for the module to be bound. If all control sections are not specified as RMODE(ANY), RMODE defaults to 24. If any section of the load module has an RMODE of 24, RMODE defaults to RMODE(24). If the RMODE operand is given without an operand, you are prompted for it. Valid RMODE values are:

24 to indicate the module must reside below the 16 MB line

ANY to indicate the module can reside anywhere in virtual storage

SPLIT to indicate that the program object is to be split into two segments according to the RMODE of the CSECTs. SPLIT is supported only for PM2 or PM3 format program objects.

LIB(*data_set***)**
specifies one or more names of library data sets to be searched by the linkage editor or binders to locate object modules referred to by the module being processed; that is, to resolve external references. When you specify more than one name, the names must be separated by a valid delimiter. If you specify more than name, the data sets are concatenated to the file name of the first data set in the list. For control statements, the first data set in the list must be pre-allocated with the ddname or file name SYSLIB prior to the LINK command. If you specify more than one name, the data sets are concatenated to the file name of the first data set and lose their individual identity. For details on dynamic concatenation, see *OS/390 MVS Programming: Authorized Assembler Services Guide*.

PLILIB | PLIBASE | PLICMIX | FORTLIB | COBLIB

PLILIB specifies the partitioned data set named SYS1.PL1LIB is to be searched by the LINK command to locate load modules that are referred to by the module being processed.

PLIBASE specifies the partitioned data set named SYS1.PLIBASE is to be searched to locate load modules referred to by the module being processed.

PLICMIX specifies the partitioned data set named SYS1.PLICMIX is to be searched to locate load modules referred to by the module being processed.

FORTLIB specifies the partitioned data set named SYS1.FORTLIB is to be searched by the LINK command to locate load modules referred to by the module being processed.

COBLIB specifies the partitioned data set named SYS1.COBLIB is to be searched by the LINK command to locate load modules referred to by the module being processed.

MAP | NOMAP

MAP specifies the PRINT data set is to contain a map of the output module consisting of the control sections, the entry names, and (for overlay structures) the segment number.

NOMAP specifies a map of the output module is *not* to be listed. NOMAP is the default.

LET | LET(*sev_code*) | NOLET
specifies a severity code, which if exceeded, causes the module to be marked non-executable. The severity code is the aggregate error level of all calls to the binder. Valid values for severity code are 0, 4, 8, and 12. If LET is specified, it defaults to LET(8); if LET is not specified or NOLET is specified, it defaults to LET(4).

XCAL | NOXCAL

XCAL specifies the output module is permitted to be marked as executable even though an exclusive call has been made between segments of an overlay structure. Because the segment issuing an exclusive call is overlaid, a return from the requested segment can be made only by another exclusive call or a branch.

NOXCAL specifies both valid and not valid exclusive calls are marked as errors. NOXCAL is the default.

XREF | NOXREF

XREF specifies a cross-reference table is to be placed on the PRINT data set. The table includes the module map and a list of all address constants referring to other control sections.

NOXREF specifies a cross-reference listing is not to be produced. NOXREF is the default.

REUS | NOREUS

REUS specifies the output is to be marked serially reusable if the input load modules and program objects was re-enterable or serially reusable. The RENT and REUS operand are mutually exclusive. If the OVLY or TEST operands are specified, the REUS operand must not be specified.

NOREUS specifies the load module is not be marked reusable. NOREUS is the default.

LINECT(60 | *line_count*)
specifies the number of lines (including heading and blank lines) contained on each page of the binder listing. The valid range is 24-200 and 0. Zero indicates a single, indefinitely long page, and values of 1-23 are forced to 24; however, there are always page ejects at the beginning of the binder listing and

the start of the map, cross reference (XREF), and summary reports. LINECT defaults to 60 lines.

LIST(SUMMARY | OFF | STMT | ALL) | NOLIST
allows you to control the type of information included in the SYSPRINT data. LIST specifies a list of all linkage editor control statements is to be produced. LIST is valid for both the linkage editor and the binder. The default for LIST is SUMMARY. This is ignored if NOPRINT is specified or NOPRINT is the default.

SUMMARY indicates that messages, control statements and a save summary report (including processing options and module attributes) are to be printed.

OFF specifies a listing of the linkage editor control statements is not to be produced. Only messages will be printed. In a batch environment, LIST(OFF) is equivalent to NOLIST.

STMT indicates that messages and control statements are to be printed. In a batch environment, LIST(STMT) is equivalent to LIST.

ALL indicates that all input activity (whether initiated by binder service calls or control statements) and the load or save summary are to be logged.

NOLIST is equivalent to LIST(OFF)

MSGLEVEL(0 | 4 | 8 | 12)
specifies the severity level below which messages are not displayed. Valid severity levels are 0, 4, 8, and 12. If a message has a severity lower than the level indicated here, it is not printed, written to either print or terminal files, or passed to the messages exit.

MAXBLK(*integer*)
specifies the maximum text block size (in bytes) for load modules that are saved in an output library by the binder. The value range is 256-32760. If you specify a value outside this range, you receive a warning message, and the value is set to the device-dependent default value.

MAXBLK defaults to ½ of SIZE(,*integer_2*) but not less than 4096 nor more than the minimum of 32760 or the track size. This value is also compatible with that used by the linkage editor.

If neither MAXBLK nor SIZE are specified, the maximum block size defaults to the blocksize of the data set. However, if DC is also specified, the maximum block size is always set to 1024.

WKSPACE(*value_1*[,*value_2*])
specifies the maximum amount of user's virtual storage available to the binder below and above 16 MB, respectively. You typically do not need to include this operand unless you have special virtual storage considerations such as the balancing of virtual storage between two concurrent applications. If coded, a minimum of WKSPACE(96,1024) is recommended for all binder operations.

value_1 indicates the maximum amount (in kilobytes) of user's virtual storage available to the binder below 16 MB in virtual storage. This value is optional; however, be certain to code a comma (,) if only *value_2* is specified.

value_2 indicates the maximum amount (in kilobytes) of user's virtual storage available to the binder above 16 MB in virtual storage. This value is optional; however, be certain to code a comma (,) if *value_1* is not also specified.

SSI(*ssi_word***)**
specifies that the system status index (SSI) is used as a binder option. If specified, the SETSSI control statement overrides this specification. Refer to the SETSSI control statement of AMASPZAP in *OS/390 MVS Diagnosis: Tools and Service Aids*, for a description of the system status index (SSI).

STORENX | NOSTORENX | STORENX(NO)

STORENX replaces the existing module of the same name in a program library with a new module, regardless of the executable status of either module. If the NAME statement is provided, the replace option (R) must be provided. STORENX is supported only by the binder.

NOSTORENX | STORENX(NO) is the default value, and can be specified as STORENX(NO).

REFR | NOREFR

REFR specifies the load module is to be marked refreshable if the input load modules and program objects was refreshable and the OVLY operand was not specified.

NOREFR specifies the output is not to be marked refreshable. NOREFR is the default.

SCTR | NOSCTR

SCTR specifies the load module created by the linkage editor or binder can be either scatter loaded or block loaded. If you specify SCTR, do not specify OVLY. This is meaningful only for the system nucleus.

NOSCTR specifies scatter loading is not permitted. NOSCTR is the default.

OVLY | NOOVLY

OVLY specifies the output module is an overlay structure and is therefore suitable for block loading only. If you specify OVLY, do not specify SCTR. OVLY is supported for load modules and PM1–level program objects.

NOOVLY specifies the load module is not an overlay structure. NOOVLY is the default.

RENT | NORENT

RENT specifies the output module is marked re-enterable provided the input load modules and program objects was re-enterable and the OVLY operand was not specified.

NORENT specifies the load module is not marked re-enterable. NORENT is the default.

SIZE(*integer_1***,***integer_2***)**
specifies the amount of virtual storage to be used by the linkage editor. The first integer (*integer_1*) indicates the maximum allowable number of bytes. If *integer_1* is omitted, the binder does not limit its use of storage that is below the 16 MB line. *integer_2* indicates the number of bytes to be used by the linkage editor buffer as the load module buffer, which is the virtual storage area used to contain input and output data. If this operand is omitted, SIZE defaults to the size specified by your system programmer. For more information on the use of *integer_2* by the binder see the description of MAXBLK on page 1-179.

NE | NONE

NE specifies the output load module cannot be processed again by the linkage editor, loader or binder. The linkage editor does not create an external symbol dictionary. If you specify either MAP or XREF, then the NE operand is not valid for the linkage editor.

NONE specifies the output load module can be processed again by the linkage editor, loader or binder and that an external symbol dictionary is present. NONE is the default.

OL | NOOL

OL specifies the output load module can be brought into real storage only by the LOAD macro instruction.

NOOL specifies the load module is not restricted to the use of the LOAD macro instruction for loading into real storage. NOOL is the default.

DC | NODC

DC specifies that no block in the load module is to be longer than 1024 bytes and no text block is to contain more than one control section.

NODC specifies the DC limits do not apply. NODC is the default. For more information see *DFSMS/MVS Program Management*

TEST | NOTEST

TEST specifies the symbol tables created by the assembler and contained in the input modules are to be placed into the output module. This is useful only if the assembler also used the TEST option.

NOTEST specifies no symbol table is to be retained in the output load module. NOTEST is the default.

HIAR | NOHIAR

HIAR specifies that hierarchy assignments for CSECTs are to be done. HIAR is not supported by the binder.

NOHIAR specifies that hierarchy assignments for CSECTs are not to be done. NOHIAR is the default.

TERM | NOTERM

TERM specifies you want error messages directed to your terminal as well as to the PRINT data set. TERM is the default.

NOTERM specifies you want error messages directed only to the PRINT data set and not to your terminal.

DCBS(*block_size*)
specifies the block size of the records contained in the output data set.

Note: DCBS is applicable only for load modules, not for program objects.

AC(*authorization_code*)
specifies an authorization code (0-255) to maintain data security. Any non-zero value causes the program to have APF authorization if the data set is APF authorized (APF = authorized program facility).

LINK Command Return Codes

Figure 1-21. LINK Command Return Codes

0	Processing successful.
8	Processing incomplete; system prompts you for additional information.
12	Processing unsuccessful.

LINK Command Examples

Example 1

Operation: Combine three object modules into a single load module.

Known:

- The names of the object modules in the sequence that the modules must be in: TPB05.GSALESA.OBJ TPB05.GSALESB.OBJ TPB05.NSALES.OBJ
- You want all of the linkage editor listings to be produced and directed to your terminal.
- The name for the output load module: TPB05.SALESRPT.LOAD(TEMPNAME)

```
link (gsalesa,gsalesb,nsales) load(salesrpt) print(*) -
xref list
```

Example 2

Operation: Create a load module from an object module, an existing load module, and a standard processor library.

Known:

- The name of the object module: VACID.M33THRUS.OBJ
- The name of the existing load module: VACID.M33PAYLD.LOAD(MOD1)
- The name of the standard processor library used for resolving external references in the object module: SYS1.PLILIB
- The entry name of the load module is MOD2.

- The alias name of the load module is MOD3.
- The name of the output load module: VACID.M33PERFO.LOAD(MOD2)

```
link(m33thrus,*) load(m33perfo(mod2)) print(*) -
  plilib map list
```

Choosing ld2 as a file name to be associated with the existing load module, the display at your terminal will be:

```
allocate dataset(m33payld.load) file(ld2)
link (m33thrus,*) load(m33perfo(mod2)) print(*) -
 plilib map list
IKJ76080A ENTER CONTROL STATEMENTS
 include ld2(mod1)
 entry mod2
 alias mod3
 (null line)
IKJ76111I END OF CONTROL STATEMENTS
```

Example 3

Operation: Re-specify the mode of an object module from 24-bit addressing and residence mode to 31-bit addressing and residence mode ANY.

Known:

- The name of the object module: ACCOUNT.MON.OBJ which has an addressing mode of 24-bit
- The name of the output load module: ACCOUNT.MINE.LOAD(NEWMOD)

```
link mon load(mine(newmod))amode(31) rmode(any)
```

LISTALC Command

Use the LISTALC command to obtain a list of the currently allocated data sets. The LISTALC command without operands displays a list of all (partitioned and not partitioned) data set names the user has dynamically allocated and those allocated by previous TSO/E commands (issued while in the current TSO/E session). This list includes terminal data sets, indicated by the word TERMFILE, and also *attr_list_name*s created by the ATTRIB command, indicated by the word NULLFILE.

If the list should include also temporary data sets, which are created and deleted in the same job, use the SYSNAMES keyword operand to display these data sets. See *OS/390 MVS JCL User's Guide*, for a detailed description of permanent and temporary data sets.

If an asterisk precedes a data set name, it indicates that the data set is allocated, but marked not-in-use.

LISTALC Command Syntax

```
►►──┬─LISTALC─┬──┬─────────┬──┬─────────┬──┬─────────┬──┬─────────┬──────────►◄
    └─LISTA───┘  └─STATUS──┘  └─HISTORY─┘  └─MEMBERS─┘  └─SYSNAMES─┘
```

LISTALC Command Operands

STATUS

specifies that you want information about the status of each data set. This operand provides you with:

- The data definition name (ddname) for the data set allocated and the *attr_list_names* created by the ATTRIB command.
- The normal termination disposition of the data set, and when listed, separated by a comma, the abnormal termination disposition. The abnormal termination disposition takes effect if an abnormal termination occurs.

  The dispositions are CATLG, DELETE, KEEP and UNCATLG. CATLG means the data set is retained and its name is in the system catalog. DELETE means references to the data set are to be removed from the system and the space occupied by the data set is to be released. KEEP means the data set is to be retained. UNCATLG means the data set name is removed from the catalog, but the data set is retained.

HISTORY

specifies that you want to obtain information about the history of each data set. This operand provides you with:

- The creation date
- The expiration date
- An indication whether the data set has password protection (non-VSAM only) or if the data set is RACF protected.

  Note: LISTALC HISTORY output may indicate NONE for security on a data set and LISTDS HISTORY output may indicate RACF security for the same data set. The LISTDS module is an authorized program that calls two RACF macros RACSTAT and RACHECK. LISTALC is not an authorized program and does not use the RACF macros.

- The data set organization (DSORG). The listing contains:

  PS for sequential
  PO for partitioned
  IS for indexed sequential
  DA for direct access
  VSAM for VSAM data entries
  DIR for any OS/390 UNIX directory
  CSPEC for any OS/390 UNIX character special file
  FILE for any OS/390 UNIX regular file
  FIFO for any OS/390 UNIX FIFO special file
  SYMLK for any OS/390 UNIX symbolic link
  ** for unspecified
  ?? for any other specification

Note: Use the LISTCAT command for further information about VSAM data entries.

MEMBERS

specifies that you want to obtain the library member names of each partitioned data set having your user ID as the leftmost qualifier of the data set name. Aliases are included.

If another application is exclusively using the partitioned data set, the system displays a message and an abend code.

SYSNAMES
specifies that you want to obtain a list of all allocated data sets, including temporary data sets. For temporary data sets the system generates qualified names that start with SYS, followed by other qualifiers. See *OS/390 MVS JCL User's Guide*, about temporary data sets and the naming conventions applied to them.

LISTALC Command Return Codes

Figure 1-22. LISTALC Command Return Codes

0	Processing successful.
12	Processing unsuccessful. An error message has been issued.

LISTALC Command Examples

Example 1

Operation: Obtain a list of the names of the data sets allocated to you (not including the names of temporary data sets).

```
listalc
```

Example 2

Operation: Obtain a list of the names of the data sets allocated to you (not including the names of temporary data sets). At the same time obtain the creation date, the expiration date, password protection, and the data set organization for each data set allocated to you.

```
lista history
```

Example 3

Operation: Obtain all available information about the data sets allocated to you (including the names of temporary data sets).

```
lista members history status sysnames
```

The output at your terminal might be similar to the following listing:

```
listalc mem status sysnames history
--DSORG--CREATED-----EXPIRES-----SECURITY---DDNAME---DISP
MICHELLE.ASM
  PS     06/06/1991  00/00/0000  WRITE      DAUGHTER KEEP
NEAL.EXAMPLE
  PO     07/03/1998  00/00/0000  PROTECTED  MYSON    KEEP,KEEP
--MEMBERS--
 MEMBER1
 MEMBER2
SYS70140.T174803.RV000.TSOSPEDT.R0000001
  **     00/00/0000  00/00/0000  NONE       SYSUT1   DELETE
ALLOCATION MUST BE FREED BEFORE RESOURCES CAN BE
RE-USED
 EDTDUMY3
 SYSIN
 SYSPRINT
READY
```

Example 4

Operation: List the names of all your active attribute lists allocated with the ATTRIB command.

```
lista status
```

The output at your terminal might be similar to the following listing:

```
lista status
--DDNAME---DISP--
SYS1.LPALIB2
 STEPLIB KEEP
SYS1.UADS
 SYSUADS KEEP
SYS1.BRODCAST
 SYSLBC KEEP
TERMFILE SYSIN
TERMFILE SYSPRINT
*SYS1.HELP
 SYS00005 KEEP,KEEP
D95BAB1.SEPT30.ASM
 SYS00006 KEEP,KEEP
NULLFILE A
NULLFILE B
READY
```

Example 5

Operation: Excerpt from a job protocol showing the output from the LISTALC command with different operands, especially how LISTALC treats the temporary data sets.

```
  ⋮
1 //jobname JOB job card data ...
  //*
2 //         EXEC  PGM=IKJEFT01,DYNAMNBR=100,REGION=8M
3 //NORBERT1 DD    DSN=JDC.NORBERT,DISP=(OLD,KEEP,DELETE)
4 //NORBERT2 DD    DISP=(NEW,DELETE),SPACE=(TRK,(1,1))
5 //NORBERT3 DD    DSN=&&DSNAME,DISP=(NEW,DELETE),
  //             SPACE=(TRK,(1,1))
  ⋮
 IGD104I JDC.NORBERT                              RETAINED,  DDNAME=NORBERT1
 IGD105I SYS95069.T122631.RA000.JDC#.R0201039    DELETED,   DDNAME=NORBERT2
 IGD105I SYS95069.T122631.RA000.JDC#.DSNAME.H02  DELETED,   DDNAME=NORBERT3
  ⋮
 READY
  LISTA
 JDC.NORBERT
  ⋮
 READY
  LISTA STATUS
 --DDNAME---DISP--
 JDC.NORBERT
   NORBERT1 KEEP,DELETE
  ⋮
 READY
  LISTA SYSNAMES
 JDC.NORBERT
 SYS95069.T122631.RA000.JDC#.R0201039
 SYS95069.T122631.RA000.JDC#.DSNAME.H02
  ⋮
 READY
 END
```

Note the three JCL DD statements identifying:

1. A permanent data set named JDC.NORBERT
2. A temporary data set without DSN parameter at all (the system will specify a data set name)
3. A temporary data set with a name of DSNAME.

At the bottom you see that only LISTALC with the SYSNAMES operand lists the permanent *and* temporary data sets.

LISTBC Command

Use the LISTBC command to display notices and mail. Notices are messages from the operator intended for all users to view. Mail is messages from another user or program to a particular user. By default, notices and mail are stored in the broadcast data set, SYS1.BRODCAST. However, your installation may use user logs. If so, mail is stored in and retrieved from individual user logs. Notices are still stored in and retrieved from the broadcast data set.

If your installation uses security labels and security checking and for SEND and LISTBC processing, MAIL messages are handled differently. When you enter the LISTBC command, LISTBC checks the security label on each MAIL message in your user log and compares it to your current security label (the security label you are logged on with). If your current security label is equal to or greater than the

message's security label, the message is displayed. If your current security label is less than the message's security label, one of the following occurs:

- If you are authorized to log on with a security label that is equal to or greater than the message's security label, you receive a message stating that there is a message in your user log that you cannot view at your current security label. Log off and log on at a greater security label and issue LISTBC again.
- If you are not authorized to log on with a security label that is equal to or greater than the message's security label, the message is deleted and you do not receive notification that it was sent.

Note: For a list of the security labels you are allowed to log on with, use the RACF command SEARCH CLASS(SECLABEL).

LISTBC Command Syntax

```
                   ┌MAIL──┐   ┌NOTICES───┐
►►──┬LISTBC──┬──┬──┴──────┴──┬──┴──────────┴──────────────────────────────►◄
    └LISTB───┘  └NOMAIL──┘   └NONOTICES──┘
```

LISTBC Command Operands

MAIL | NOMAIL

MAIL specifies that you want to receive the messages from the broadcast data set or the user log data set that are intended specifically for you. MAIL is the default.

NOMAIL specifies that you do not want to receive messages intended specifically for you.

NOTICES | NONOTICES

NOTICES specifies that you want to receive the messages from the broadcast data set that are intended for all users. NOTICES is the default.

NONOTICES specifies that you do not want to receive the messages that are intended for all users.

LISTBC Command Return Codes

Figure 1-23. LISTBC Command Return Codes

0	Processing successful.
12	Processing unsuccessful.

The following return codes are valid only if you have an installation-defined user log data set:

Figure 1-24 (Page 1 of 2). LISTBC Command Return Codes (Installation-Defined User Log Data Set)

0	Messages and notices are displayed.
4	Only messages are displayed.

Figure 1-24 (Page 2 of 2). LISTBC Command Return Codes (Installation-Defined User Log Data Set)

6	One or more messages were deleted from the user log. The receiver is not authorized at a security label at which the message can be viewed.
8	Only notices are displayed.
10	User log contains messages that cannot be viewed at user's current security label.
12	No notices or messages are displayed.
16	Messages and notices are not displayed, user denied access.
20	Messages and notices are not displayed, command not authorized.
92	Messages and notices are not displayed, system error.

LISTBC Command Examples

Example 1

Operation: Specify that you want to receive all messages.

```
listbc
```

Example 2

Operation: Specify that you want to receive only the messages intended for all terminal users.

```
listbc nomail
```

LISTCAT Command

Use the LISTCAT command to list entries from a catalog. The entries listed can be selected by name or entry type, and the fields to be listed for each entry can additionally be selected.

In this book, “with SMS” indicates that SMS is installed and is active.

With Storage Management Subsystem, LISTCAT also lists the following Storage Management Subsystem class names:

- *Data class* contains the data set attributes related to the allocation of the data set, such as LRECL, RECFM, SPACE, and TRACKS.
- *Storage class* contains performance and availability attributes related to the storage occupied by the data set.
- *Management class* contains the data set attributes related to the migration and backup of the data set, such as performed by the Data Facility Hierarchical Storage Manager (DFHSM). A management class can be assigned only to a data set that also has a storage class assigned.

For information about these classes, see “SMS Classes” on page 1-20.

For MVS, the original TSO LISTCAT command has been replaced by an Access Method Services command of the same name. The operand descriptions that follow provide the information required to use these services for normal TSO/E operations.

The TSO/E user who wants to manipulate VSAM data sets or use the other Access Method Services from the terminal should see *DFSMS/MVS Access Method Services for VSAM*. For error message information, see the MVS/ESA System Messages library.

The LISTCAT command supports unique operand abbreviations in addition to the usual abbreviations produced by truncation. The syntax and operand explanations show these unique cases.

When LISTCAT is invoked and no operands are specified, the user ID or the prefix specified by the PROFILE command becomes the highest level of entry name qualification. Only those entries associated with the user ID are listed.

LISTCAT Command Syntax

```
►►─┬─LISTCAT─┬─┬─────────────────────────────────────────────────────►
   └─LISTC───┘ └─CATALOG(catalog_name─┬──────────────┬─)─┘
                                      └─/password────┘
►─┬──────────────────────────────────────────────────────────────────►
  └─┬─OUTFILE─┬─(ddname)─┘
    └─OFILE───┘
►─┬─┬──────────────────────────────────────────────┬─┬─────────┬─┬─────►
  │ │ ┌──────────────────────────────────────────┐ │ └─CLUSTER─┘ └─DATA─┘
  │ ├─ENTRIES(─┬─entry_name─┬──────────────┬─)─┤
  │ │          │            └─/password────┘ │
  │ └─┬─LEVEL─┬─(level)──────────────────────┘
  │   └─LVL───┘
►─┬─┬─INDEX─┬─┬─SPACE─┬─┬─NONVSAM─┬─┬─USERCATALOG─┬──────────────────►
  │ └─IX────┘ └─SPC───┘ └─NVSAM───┘ └─UCAT───────┘
►─┬─┬─GENERATIONDATAGROUP─┬─┬─PAGESPACE─┬─┬─ALIAS─┬──────────────────►
  │ └─GDG─────────────────┘ └─PGSPC─────┘ └───────┘
►─┬─┬─CREATION(days)─┬─┬─EXPIRATION(days)─┬─┬─NAME──────┬──────────►
  │ └────────────────┘ └──────────────────┘ │           │
                                            ├─ALL───────┤
                                            ├─VOLUME────┤
                                            ├─ALLOCATION┤
                                            └─HISTORY───┘
►─┬─┬─DATACLAS─┬─┬─MGMTCLAS─┬─┬─STORCLAS─┬──────────────────────────►◄
  └─┘          └─┘          └─┘          └─┘
```

LISTCAT Command Operands

CATALOG(*catalog_name***[/***password***])**

specifies the name of the catalog that contains the entries to be listed. When CATALOG is coded, only entries from that catalog are listed.

catalog_name is the name of the catalog.

password specifies the read level or higher-level password of the catalog that contains entries to be listed. When the entries to be listed contain information about password-protected data sets, a password must be supplied either through this operand or through the ENTRIES operand. If passwords are to be listed, you must specify the master password.

OUTFILE(*ddname*) | OFILE(*ddname*)
specifies a data set other than the terminal to be used as an output data set. The ddname can correspond to the name specified for the FILE operand of the ALLOCATE command. The data can be listed when the file is freed. The ddname identifies a DD statement that, in turn, identifies the alternate output data set. If OUTFILE is not specified, the entries are displayed at the terminal.

The normal output data set for listing is SYSPRINT. The default operands of this data set are:

- Record format: VBA
- Logical record length: 125, that is, 121+4
- Block size: 629, that is, 5 x (121+4)+4

Print lines are 121 bytes in length. The first byte is the ANSI control character. The minimum specifiable LRECL is 121 (U-format records only). If a smaller size is specified, it is overridden to 121.

It is possible to alter the above defaults through specification of the desired values in the DCB operand of the SYSPRINT statement. The record format, however, cannot be specified as F or FB. If you do specify either one, it is changed to VBA.

In several commands, you have the option of specifying an alternate output data set for listing. If you do specify an alternate, you must specify DCB operands in the referenced DD statement. When specifying an alternate output data set, you should not specify F or FB record formats.

ENTRIES(*entry_name*/*password*)
specifies the names of the entries to be listed. If neither ENTRIES nor LEVEL is coded, only the entries associated with the user ID are listed. For more information about the ENTRIES operand, see *DFSMS/MVS Access Method Services for VSAM*.

entry_name specifies the names or generic names of entries to be listed. Entries that contain information about catalogs can be listed only by specifying the name of the master or user catalog as the *entry_name*. The name of a data space can be specified only when SPACE is the only type specified. If a volume serial number is specified, SPACE must be specified.

Note: You can change a qualified name into a generic name by substituting an asterisk (*) for only one qualifier. For example, `A.*` specifies all two-qualifier names that have `A` as first qualifier; `A.*.C` specifies all three-qualifier names that have `A` for first qualifier and `C` for third qualifier. However, LISTCAT does not accept `*.B` as a valid generic name. The `*` is not a valid user ID for the first qualifier.

password specifies a password when the entry to be listed is password protected and a password was not specified through the CATALOG operand. The password must be the read or higher-level password. If protection attributes are to be listed, you must supply the master password. If no password is supplied, the operator is prompted for each entry's password. Passwords cannot be specified for non-VSAM data sets, aliases, generation data groups, or data spaces.

LEVEL(*level*) | LVL(*level*)
specifies the level of *entry_names* to be listed. If neither LEVEL nor ENTRIES is coded, only the entries associated with the user ID are listed.

CLUSTER
specifies cluster entries are to be listed. When the only entry type specified is CLUSTER, entries for data and index components associated with the clusters are not listed.

DATA
specifies entries for data components, excluding the data component of the catalog, are to be listed. If a cluster's name is specified on the ENTRIES operand and DATA is coded, only the data component entry is listed.

INDEX | IX
specifies entries for index components, excluding the index component of the catalog, are to be listed. When a cluster's name is specified on the ENTRIES operand and INDEX is coded, only the index component entry is listed.

SPACE | SPC
specifies entries for volumes containing data spaces defined in this catalog are to be listed. Candidate volumes are included. If entries are identified by *entry_name* or *level*, SPACE can be coded only when no other *entry_type* restriction is coded.

NONVSAM | NVSAM
specifies entries for non-VSAM data sets are to be listed. When a generation data group's name and NONVSAM are specified, the generation data sets associated with the generation data group are listed.

USERCATALOG | UCAT
specifies entries for user catalogs are to be listed. USERCATALOG is applicable only when the catalog that contains the entries to be listed is the master catalog.

Note: When listing user catalogs, PROFILE NOPREFIX must be issued to ensure that *all* user catalogs will be found.

GENERATIONDATAGROUP | GDG
specifies entries for generation data groups are to be listed.

PAGESPACE | PGSPC
specifies entries for page spaces are to be listed.

ALIAS
specifies entries for alias entries are to be listed.

CREATION(*days*)
specifies entries are to be listed only if they were created no later than that number of days ago.

EXPIRATION(*days*)
specifies entries are to be listed only if they expire no later than the number of days from now.

ALL | NAME | VOLUME | ALLOCATION | HISTORY
specifies the fields to be included for each entry listed. If no value is coded, NAME is the default.

With Storage Management Subsystem, the operands also list Storage Management Subsystem class names and the last backup data set.

ALL specifies all fields are to be listed.

NAME specifies names of the entries are to be listed. The default is NAME.

VOLUME specifies the name, owner identification, creation date, expiration date, entry type, volume serial numbers and device types allocated to the entries are to be listed. Volume information is not listed for cluster entries (although it is for the cluster's data and index entries), aliases, or generation data groups.

ALLOCATION specifies the information provided by specifying VOLUME and detailed information about the allocation are to be listed. The information about allocation is listed only for data and index component entries.

HISTORY specifies the name, owner identification, creation date, and expiration date of the entries are to be listed.

DATACLAS
with Storage Management Subsystem, indicates that the data class of the catalog is to be listed.

MGMTCLAS
with Storage Management Subsystem, indicates that the management class of the catalog is to be listed.

STORCLAS
with Storage Management Subsystem, indicates that the storage class of the catalog is to be listed.

LISTCAT Command Return Codes

Figure 1-25. LISTCAT Command Return Codes

0	Processing successful. Informational messages might have been issued.
4	Processing successful, but a warning message has been issued.
8	Processing was completed, but specific details were bypassed.
12	Processing unsuccessful.
16	Severe error or problem encountered.

LISTDS Command

Use the LISTDS command to have the attributes of specific data sets displayed at your terminal. The LISTDS command works differently, depending upon whether the data set is VSAM or non-VSAM. If you are unsure as to whether the data set is VSAM or not, enter the LISTDS command with no operands.

A VSAM data set causes the LISTDS command to display only the data set organization (DSORG), which is VSAM. Use the LISTCAT command to obtain more information about a VSAM data set.

For non-VSAM data sets, you can obtain:

- The volume identification (VOLID) of the volume on which the data set resides. A volume can be a disk pack or a drum.
- The logical record length (LRECL)
- The block size (BLKSIZE)

- The record format (RECFM)
- The data set organization (DSORG). The data set organization is indicated as follows:
  - PS for sequential
  - PO for partitioned
  - IS for indexed sequential
  - DA for direct access
  - VSAM for VSAM data entries
  - ** for unspecified
  - ?? for any other specification
- Directory information for members of partitioned data sets, if you specify the data set name in the form *data_set_name(member_name).*
- Creation date, expiration date, and, for non-VSAM only, security attributes.
- File name and disposition
- Data set control blocks (DSCB).

Note: Data sets that are dynamically allocated by the LISTDS command are automatically freed when the command terminates, unless the data set previously was allocated with the permanent attribute. You must explicitly free dynamically allocated data sets.

LISTDS Command Syntax

```
►►─LISTDS─(──┬─data_set─┬──)──────────────────────────────────────►
             ▼          │
             └──────────┘
                         └─STATUS─┘ └─HISTORY─┘ └─MEMBERS─┘

►──┬─LABEL─┘ └─CATALOG(catalog_name)─┘ └─LEVEL─┘──────────────────►◄
```

LISTDS Command Operands

(*data_set*)

specifies one or more data set names. This operand identifies the data sets that you want to know more about. Each data set specified must be currently allocated or available from the catalog, and must reside on a currently active volume. The names in the data set list can contain a single asterisk in place of any level except the first. When this is done, all cataloged data sets whose names begin with the specified qualifiers are listed. For example, `A.*.C` specifies all three-qualifier names that have `A` for the first qualifier and `C` for the third qualifier.

Note: Do not use alias data set names with this command.

STATUS

specifies that you want the following additional information:

- The ddname currently associated with the data set.
- The normal termination disposition of the data set, and when listed, separated by a comma, the abnormal termination disposition. The abnormal termination disposition takes effect if an abnormal termination occurs.

  The keywords denoting the dispositions are CATLG, DELETE, KEEP, and UNCATLG. CATLG means the data set is cataloged. DELETE means the

data set is to be removed. KEEP means the data set is to be retained. UNCATLG means the name is removed from the catalog, but the data set is retained.

HISTORY
specifies that you want to obtain the creation and expiration dates for the specified data sets and find out whether the non-VSAM data sets are password-protected or if the data set is RACF protected.

Note: LISTALC HISTORY output may indicate NONE for security on a data set and LISTDS HISTORY output may indicate RACF security for the same data set. The LISTDS module is an authorized program that calls two RACF macros RACSTAT and RACHECK. LISTALC is not an authorized program and does not use the RACF macros.

MEMBERS
specifies that you want a list of all the members of a partitioned data set, including aliases.

LABEL
specifies that you want to have the entire data set control block (DSCB) listed at your terminal. This operand is applicable only for non-VSAM data sets on direct access devices. The list is in hexadecimal notation.

CATALOG(*catalog_name***)**
specifies the user catalog that contains the names in the data set list. CATALOG is required only if the names are in a catalog other than STEPCAT or the catalog implied by the first-level qualifier of the name.

LEVEL
specifies names in the data set list are to be high-level qualifiers. All cataloged data sets whose names begin with the specified qualifiers are listed. If LEVEL is specified, the names cannot contain asterisks.

Specify only one data set list with the LEVEL option.

LISTDS Command Return Codes

Figure 1-26. LISTDS Command Return Codes

0	Processing successful.
12	Processing unsuccessful. An error message has been issued.

LISTDS Command Examples

Example 1

Operation: List the basic attributes of a particular data set.

Known:

- The data set name: ZALD58.CIR.OBJ

```
listds cir
```

The display at your terminal might be similar to the following:

```
listds cir
ZALD58.CIR.OBJ
--RECFM-LRECL-BLKSIZE-DSORG
  FB    80    80      PS
--VOLUMES--
 D95LIB
READY
```

LOADGO Command

Use the LOADGO command to load a compiled or assembled program into virtual storage and begin execution.

The LOADGO command loads object modules produced by a compiler or assembler, and load modules produced by the linkage editor or binder. If you want to load and execute a single load module, the CALL command is more efficient. The LOADGO command also searches a call library (SYSLIB) or a resident link pack area, or both, to resolve external references.

The LOADGO command invokes the binder or the batch loader to accomplish this function, and combines basic editing and loading services of the binder or linkage editor and program fetch in one job step. Therefore, the *load* function is equivalent to the *link-edit and go* function.

The LOADGO command does not produce load modules or program objects for program libraries. If NOBINDER is specified, LOADGO does not process linkage editor control statements such as INCLUDE, NAME, OVERLAY, and so on.

LOADGO Command Syntax

```
►►─┬─LOADGO─┬─(──┬──data_set──┬──)──┬──────────────────────────────────►
   └─LOAD───┘    └◄────────────┘     └─'parameters'─┘

►──┬─PRINT(──┬─*──────────────┬──)──┬──┬─AMODE(──┬─24──┬──)──┬
   │         │─data_set_name──┘     │  │         │─31──│     │
   └─NOPRINT─────────────────────────┘  │         │─ANY─│     │
                                        │         └─MIN─┘     │

►──┬─RMODE(──┬─24──┬──)──┬──┬─LIB(──┬──data_set──┬──)──┬──┬─BINDER──┬──►
   │         │─ANY─│     │  │       └◄────────────┘     │  └─NOBINDER─┘
   │         └─SPLIT─┘     │

►──┬─CASE(──┬─UPPER──┬──)──┬──┬─COMPAT(──┬─PM3─────┬──)──┬
   │        └─MIXED──┘     │  │          │─PM2─────│     │
                           │  │          │─PM1─────│     │
                           │  │          │─LKED────│     │
                           │  │          │─CURRENT─│     │
                           │  │          └─CURR────┘     │

►──┬─FILL(fill_byte)─┬──┬─HOBSET(──┬─NO──┬──)──┬
   │                 │  │          └─YES─┘     │

►──┬─LINECT(──┬─60──────────┬──)──┬──┬─LIST(──┬─OFF─┬──)──┬──┬──┬─PLILIB──┬
   │          └─line_count──┘     │  │        │─STMT│     │  │  │─PLIBASE─│
                                  │  │        └─ALL─┘     │  │  │─PLICMIX─│
                                  │  └─NOLIST─────────────┘  │  │─FORTLIB─│
                                  │                          │  └─COBLIB──┘

►──┬─TERM───┬──┬─RES────┬──┬─NOMAP──┬──┬─CALL───┬──┬─NOLET──────────┬──►
   └─NOTERM─┘  └─NORES──┘  └─MAP────┘  └─NOCALL─┘  │─LET────────────│
                                                   └─LET(──┬─0──┬──)─┘
                                                           │─4──│
                                                           │─8──│
                                                           └─12─┘

►──┬─MSGLEVEL(──┬─0──┬──)──┬──┬─WKSPACE(──┬─value_1──┬──┬─,value_2──┬──)──┬
   │            │─4──│     │  │           └──────────┘  └───────────┘     │
   │            │─8──│     │  │
   │            └─12─┘     │

►──┬─SIZE(integer)─┬──┬─EP(entry_name)─┬──┬─NAME(program_name)─┬──►◄
   └───────────────┘  └────────────────┘  └────────────────────┘
```

LOADGO Command Operands

(*data_set***)**
specifies the names of one or more object modules, load modules and /or program objects to be loaded and executed. The names can be data set names, names of members of partitioned data sets, or both (see the data set naming conventions). When you specify more than one name, the names must be enclosed within parentheses and separated from each other by a standard delimiter (blank or comma).

'*parameters*'
specifies any parameters that you want to pass to the program to be executed.

PRINT(*data_set_name* **| *) | NOPRINT**

PRINT(*data_set_name* **| *)** specifies the name of the data set that is to contain the listings produced by the LOADGO command. If you omit the data set name, the generated data set is named according to the data set naming conventions. You can substitute an asterisk (*) for the data set name, if you want to have the listings displayed at your terminal. If you specify the MAP operand, then PRINT is the default.

NOPRINT specifies no listings are to be produced. This operand suppresses the MAP operand. If both PRINT and NOPRINT are omitted and you do not use the MAP operand, then NOPRINT is the default.

AMODE(24 | 31 | ANY | MIN)
specifies the addressing mode for the module to be loaded. If the AMODE operand is not specified, the AMODE defaults to the AMODE of the main entry point. Valid AMODE values are:

24 to indicate the module is invoked in 24-bit addressing mode

31 or ANY to indicate the module is invoked in 31-bit addressing mode

MIN causes the binder to set the AMODE to the most restrictive AMODE of all control sections in the module. In this respect, 24 is more restrictive than 31, which is more restrictive than ANY.

The MIN keyword is used only to control binder processing. It assists the binder in determining the resultant AMODE of the module. However, MIN is never used as an AMODE itself and will not appear in the directory entry of the resultant load module or program object.

For more information see *DFSMS/MVS Program Management*.

RMODE(24 | ANY | SPLIT)
specifies the residence mode for the module to be loaded. If all control sections are not specified as RMODE(ANY), RMODE defaults to 24. If any section of the load module has an RMODE(24), RMODE defaults to 24. Valid RMODE values are:

24 to indicate the module must reside below the 16 MB line

ANY to indicate the module can reside anywhere in virtual storage

SPLIT to indicate that the program object is to be split into two segments according to the RMODE of the CSECTs. SPLIT is supported only for PM2 or PM3 format program objects.

LIB(*data_set***)**
specifies names of one or more library data sets that are to be searched to find modules referred to by the module being processed (that is, to resolve external references).

BINDER | NOBINDER

BINDER specifies that MVS use binder services for this load module or object module rather than the loader service program. The binder can be used for to read modules stored in a PDS as well as program objects in a PDSE. If DFSMS/MVS V1R1 or later is installed, BINDER is the default.

NOBINDER specifies that MVS not use binder services for this object module; the loader service program is used to process the object module(s) into load module(s).

CASE(UPPER | MIXED)

UPPER specifies that the binder translates to uppercase all lowercase names found in input modules, binder control statements, and LOADGO parameters. UPPER is the default.

MIXED specifies that the binder respect uppercase and lowercase names found in input modules, control statements, call parameters, and LOADGO parameters. If MIXED is specified, the binder treats two strings differently if any character in one string is a different case than the corresponding character in the second string. binder keywords are always translated to uppercase.

COMPAT(PM3 | PM2| PM1 | LKED | CURR | CURRENT)
specifies binder compatibility level.

PM3 specifies that the binder create a PM3-level program object. PM3 is the default.

PM2 specifies that the binder create a PM2-level program object.

PM1 specifies that the binder create a PM1-level program object or load module.

LKED specifies that the binder process certain options, such as AMODE/RMODE and REUSability, in a manner compatible with the linkage editor.

CURR is the abbreviation of CURRENT and has the same specification.

CURRENT will instruct the binder to set COMPAT on the currently highest value. For DFSMS 1.4.0 PM3 is the highest level.

Note: Although LOADGO accepts all COMPAT values, they produce equivalent results (except COMPAT(LKED)).

FILL*(fill_byte)*
specifies to the binder the next byte value to be used to initialize uninitilalized storage areas in the loaded program.

HOBSET(NO | YES)

NO specifies that the binder NOT set the high-order bit (HOB) in V-type adcons according to the AMODE of the target entry point. NO is the default.

YES specifies that the binder set the high-order bit (HOB) in V-type adcons according to the AMODE of the target entry point.

LINECT
specifies the number of lines (including heading and blank lines) contained on each page of the binder listing. The valid range is 24-200 and 0. Zero indicates a single, indefinitely long page, and values of 1-23 are forced to 24; however, there are always page ejects at the beginning of the binder listing and the start of the map, cross reference (XREF), and summary reports. LINECT defaults to 60 lines.

LIST(SUMMARY | OFF | STMT | ALL) | NOLIST
allows you to control the type of information included in the SYSPRINT data. LIST is valid for both the linkage editor and the binder.

SUMMARY indicates that messages, control statements and a load summary report (including processing options and module attributes) are to be printed.

OFF indicates that only messages will be printed. In a batch environment, LIST(OFF) is equivalent to NOLIST.

STMT indicates that messages and control statements to be printed. In a batch environment, LIST(STMT) is equivalent to LIST.

ALL indicates that all input activity (whether initiated by binder service calls or control statements) and the load or save summary be logged.

NOLIST is equivalent to LIST(OFF)

PLILIB
specifies the partitioned data set named SYS1.PL1LIB is to be searched to locate load modules referred to by the module being processed.

PLIBASE
specifies the partitioned data set named SYS1.PLIBASE is to be searched to locate load modules referred to by the module being processed.

PLICMIX
specifies the partitioned data set named SYS1.PLICMIX is to be searched to locate load modules referred to by the module being processed.

FORTLIB
specifies the partitioned data set named SYS1.FORTLIB is to be searched to locate load modules referred to by the module being processed.

COBLIB
specifies the partitioned data set named SYS1.COBLIB is to be searched to locate load modules referred to by the module being processed.

TERM | NOTERM

TERM specifies that you want any error messages directed to your terminal as well as the PRINT data set. If both TERM and NOTERM are omitted, then TERM is the default.

NOTERM specifies that you want any error messages directed only to the PRINT data set.

RES | NORES

RES specifies the link pack area is to be searched for load modules (referred to by the module being processed) before the specified libraries are searched. If both RES and NORES are omitted, then RES is the default. If you specify the NOCALL operand, the RES operand is not valid.

NORES specifies the link pack area is not to be searched to locate modules referred to by the module being processed.

MAP | NOMAP

MAP specifies a list of external names and their real storage addresses are to be placed on the PRINT data set. This operand is ignored when NOPRINT is specified.

NOMAP specifies external names and addresses are not to be contained in the PRINT data set. If both MAP and NOMAP are omitted, then NOMAP is the default.

CALL | NOCALL

CALL specifies the data set specified in the LIB operand is to be searched to locate load modules referred to by the module being processed. If both CALL and NOCALL are omitted, then CALL is the default.

NOCALL specifies the data set specified by the LIB operand is not to be searched to locate modules that are referred to by the module being processed. The RES operand is not valid when you specify NOCALL.

LET(*sev_code***)**
specifies a severity code, which if exceeded, causes the module to be marked non-executable. The severity code is the aggregate error level of all calls to the binder. Valid values for severity code are 0, 4, 8, and 12. If LET is specified, it defaults to LET(8); if LET is not specified or NOLET is specified, it defaults to LET(4).

MSGLEVEL
specifies the severity level below which messages are not displayed. Valid severity levels are 0, 4, 8, and 12. If a message has a severity lower than the level indicated here, it is not printed, written to either print or terminal files, or passed to the messages exit.

WKSPACE(*value_1***[,***value_2***])**
specifies the maximum amount of user's virtual storage available to the binder below and above 16 MB, respectively. You typically do not need to include this operand unless you have special virtual storage considerations such as the balancing of virtual storage between two concurrent applications. If coded, a minimum of WKSPACE(96,1024) is recommended for all binder operations.

value_1 indicates the maximum amount (in kilobytes) of user's virtual storage available to the binder below 16 MB in virtual storage. This value is optional; however, be certain to code a comma (,) if only *value_2* is specified.

value_2 indicates the maximum amount (in kilobytes) of user's virtual storage available to the binder above 16 MB in virtual storage. This value is optional; however, be certain to code a comma (,) if *value_1* is not also specified.

SIZE(*integer***)**
specifies the size, in bytes, of dynamic real storage that can be used by the loader. If this operand is not specified, then the size defaults to the size specified by your system programmer.

EP(*entry_name***)**
specifies the external name for the entry point to the loaded program. If the entry point of the loaded program is in a load module, you must specify the EP operand.

NAME(*program_name***)**
specifies the name that you want assigned to the loaded program.

LOADGO Command Return Codes

Figure 1-27. LOADGO Command Return Codes

0	Processing successful.
8	Processing incomplete, system prompts you for additional information.
12	Processing unsuccessful.

LOADGO Command Examples

Example 1

Operation: Load and execute an object module.

Known:

- The name of the data set: SHEPD58.CSINE.OBJ

```
load csine print(*)
```

Example 2

Operation: Combine an object module and a load module, and then load and execute them.

Known:

- The name of the data set containing the object module: LARK.HINDSITE.OBJ
- The name of the data set containing the load module: LARK.THERMOS.LOAD(COLD)

```
load (hindsite thermos(cold)) print(*) +
lib('sys1.sortlib') +
nores map size (44k) ep (start23) name(thermsit)
```

Example 3

Operation: Combine and execute several object and load modules with differing AMODE and RMODE attributes. The new load module should execute in 31-bit addressing mode and be loaded anywhere in storage.

Known:

- The name of the main routine, a load module in 24-bit addressing mode: MY.PROG.LOAD(MAIN)
- The names of two subroutines, which are updated with changes before loading; both are AMODE(31) and RMODE(ANY): MY.SUB1.OBJ, MY.SUB2.OBJ

```
load (sub1 sub2 'my.prog.load(main)') print (*) amode(31)
rmode(any)
```

LOGOFF Command

Use the LOGOFF command to terminate your terminal session. When you enter the LOGOFF command, the system frees all the data sets allocated to you. Data remaining in storage is lost.

If you intend to enter the LOGON command immediately to begin a new session using different attributes, you are not required to LOGOFF. Instead, you can just enter the LOGON command as you would enter any other command.

If your terminal is a Systems Network Architecture (SNA) terminal that uses VTAM, you might be required to use a format different from the one described here. Your system programmer should provide you with this information.

When the LOGOFF command is executed in the background, your TSO/E session is terminated normally. Any remaining commands in the input stream are ignored.

LOGOFF Command Syntax

```
►►──LOGOFF──┬─DISCONNECT─┬──────────────────────────────────────────►◄
            └─HOLD───────┘
```

LOGOFF Command Operands

DISCONNECT

specifies the line is to be disconnected following logoff. If no operand is specified, then DISCONNECT is the default.

HOLD [3]

specifies the line is not to be disconnected following logoff.

[3] Not supported with terminals that use VTAM.

LOGOFF Command Examples

Example 1

Operation: Terminate your terminal session.

```
logoff
```

LOGON Command

Use the LOGON command to start a terminal session. If you are not familiar with the logon process, see *OS/390 TSO/E User's Guide*.

Before you can use the LOGON command, your installation must provide you with certain basic information:

- Your user identification (1-7 characters)
- A password (1-8 alphanumeric characters), if required by your installation. For a RACF-defined user, your installation assigns a RACF password for you.
- An account number, if required by your installation
- A procedure name, if required by your installation
- For a RACF-defined user, a GROUP name, if required by your installation.

The information you enter with the LOGON command and its operands is used by the system to start and control your time sharing session. At least, you are required to identify yourself to the system with the *user_id* operand. Mostly, you are required to enter a password. Other operands are optional, or provide default values, and allow you to control the way your session is to work. For example, you can specify whether you want to receive messages from the system or from other users while your session is active.

Full-Screen LOGON versus Line Mode LOGON

There are two types of LOGON command processing: full-screen LOGON command processing and line mode LOGON command processing.

- If you are an IBM 3270 terminal user, using a display format of 24 x 80 (24 lines of data by 80 characters on a line) or larger, you must use full-screen logon. Full-screen logon users need only enter `logon` *`user_id`*. TSO/E then displays a full-screen logon menu with appropriate entry fields for both RACF and non-RACF defined users.

  If you enter more parameters than *user_id* on the LOGON command, TSO/E accepts and processes them with the exception of the password fields. TSO/E requires the password entries to be entered on the logon menu for full-screen logon processing.

- If your terminal is such that full-screen LOGON command processing cannot be used, then all of the logon information must be specified in line mode and you might be prompted by the system to enter values for certain operands that are required by your installation.

Full-Screen LOGON Processing

After you have issued a LOGON command the full-screen logon command processing performs the following:

- It displays a menu with the previous session's logon parameter values. Logon command parameters entered on the LOGON command override any default values from the previous session.
- It requests that you enter a password. If you enter a not valid password, the system will prompt you to re-enter it after you pressed the Enter key.
- If your user ID is defined to RACF, it allows you to enter a *new password* on the logon panel.

  If you have entered a new password, and after pressing the Enter key, logon processing prompts you to re-enter the new password in the same field a second time to verify the password. If both entries of the new password match, logon processing proceeds. Otherwise, logon processing displays a message that the password verification failed. If this occurs, do one of the following:

  – If you want to change your password, or if the system requires you to change it because the old password is expired, enter again a new password. The system will prompt you to enter the new password again for verification.

  – If you do not want to change your password, press Enter without entering a new password.

  Note: Full-screen logon processing allows you to enter parameter values in any of the menu fields before pressing the Enter key. Actual field verification takes place after the Enter key is pressed. If you have entered a invalid password, the system responds with message `Password not authorized for user ID` after you press Enter, awaiting the correct password. Should you have entered an invalid password *and* a new password, the system responds with message `Password not authorized for user ID. New password ignored` after you press Enter, and ignores any entry you did in the new password field. This behavior is somewhat different from pre-OS/390 V1R2.0 releases; you need to re-enter the new password after you have corrected the original “Password not authorized ...” problem.

- Further, full-screen logon allows for modification and entry of logon parameter values. You can type over existing values on the menu displayed. Existing values are either from a previous session logon or from the current LOGON command parameters.
- It displays RACF entry fields, if RACF is installed and active and the user ID is RACF-defined.
- Full-screen logon allows you to enter a single TSO/E command up to 80 characters long on the logon menu. This command is executed *after* any command entered in the PARM field on the EXEC statement of the LOGON procedure. This command is also remembered from session to session.
- It displays help information for all logon parameters whenever you can enter USERID, PASSWORD, or RACF password. Help information is displayed for the entry being prompted for and in all cases, except for the PASSWORD entry fields, displays the user entered data as well.

Note: If your terminal uses VTAM, you might be required to use a format different from the one described here. Your system programmer should provide you with this information.

When the LOGON command is executed in the background, the system ignores any remaining commands in the input stream. Your foreground TSO/E session does not end. You are still logged on.

LOGON Command Syntax

```
►►─LOGON─user_identity──┬──────────────────────────────┬──────────────►
                        └─/password─┬──────────────┬─┘
                                    └─/new_password─┘

►──┬──────────────┬──┬──────────────────────┬──┬──────────────────────►
   └─ACCT(account)─┘  └─PROC(procedure_name)─┘  └─SIZE(integer)─────┘

   ┌─NOTICES──┐  ┌─MAIL──┐
►──┤          ├──┤       ├──┬──────────────────────┬──┬──────────────►
   └─NONOTICES─┘  └─NOMAIL─┘  └─PERFORM(value)─┘  ├─RECONNECT──┤
                                                  └─NORECONNECT─┘

►──┬──────────────────────────────┬──┬──────────────┬──┬──────────┬──►◄
   └─SECLABEL(security_label)─┘  └─GROUP(name)─┘  └─OIDCARD─┘
```

LOGON Command Operands

user_identity/*password*|*new_password*
specifies your user identification and, if required, a valid password or new password. Your user identification must be separated from the password by a slash (/) and, optionally, one or more standard delimiters (tab, blank, or comma). Your identification and password must match the identification contained in the system's user attribute data set (UADS), if you are not RACF-defined. If you are RACF-defined, you must enter the password defined in the RACF data set as the value for password. The new password specifies the password that is to replace the current password. *new_password* must be separated from *password* by a slash(/) and, optionally, one or more standard delimiters (tab, blank, or comma). *new_password* is 1 to 8 alphanumeric characters long. This operand is ignored for non-RACF defined users. (Printing is suppressed for some types of terminals when you respond to a prompt for a password.)

ACCT(*account***)**
specifies the account number required by your installation. If the UADS contains only one account number for the password that you specify, this operand is not required. If the account number is required and you omit it, the system prompts you for it.

For TSO/E, an account number must not exceed 40 characters, and must not contain a blank, tab, quotation mark, apostrophe, semicolon, comma, or line control character. Right parentheses are permissible only when left parentheses balance them somewhere in the account number.

PROC(*procedure_name***)**
specifies the name of a cataloged procedure containing the job control language (JCL) needed to initiate your session.

SIZE(*integer*)
specifies the maximum region size allowed for a conditional GETMAIN during the terminal session. If you omit this operand, the UADS contains a default value for your region size. The UADS also contains a value for the maximum region size that you are allowed. If you specify a region size exceeding the maximum region size allowed by the UADS (in this case, the UADS value MAXSIZE is used), then this operand is rejected.

NOTICES | NONOTICES
specifies whether messages intended for all terminal users are to be listed at your terminal during logon processing.

NOTICES specifies messages are to be listed. NOTICES is the default.

NONOTICES specifies no messages are to be listed.

MAIL | NOMAIL
specifies whether you want messages intended specifically for you to be displayed at your terminal during logon processing.

MAIL specifies that you want messages to be displayed. MAIL is the default.

NOMAIL specifies that you do not want messages to be displayed.

PERFORM(*value*)
specifies the performance group to be used for the terminal session. The value must be an integer from 1-999. However, the line mode LOGON limit is 255. The default value is determined by the individual installation.

RECONNECT | NORECONNECT

RECONNECT specifies that you want to reconnect your session when you re-logon after your session is disconnected. If you are RACF-defined, RECONNECT remains in effect across sessions until you specify NORECONNECT. However, if the UADS contains your user information, then RECONNECT does not remain in effect across sessions. If you specified a password in the disconnected session, you must specify the same password with the RECONNECT option. If RECONNECT is specified, then any operands other than user ID and password are ignored.

NORECONNECT specifies that you do not want automatic reconnect to be in effect for the session you are logging onto.

SECLABEL(*security_label*)
specifies a security label for your TSO/E session. The SECLABEL (security label) may be 1 to 8 alphanumeric characters. The first character must be alphabetic or one of the special characters (#, $, or @). SECLABEL is recognized only if your installation is using security labels and security checking and you are RACF-defined. If you specify a SECLABEL for which you are not authorized, you receive an error message and are prompted for another SECLABEL. If you do not specify SECLABEL on the LOGON command, RACF uses the default set by your administrator.

If you log on to TSO/E in line mode and you want to use a SECLABEL other than the default, you must include it each time you log on.

GROUP(*name*)
specifies a 1 to 8 character ID composed of alphanumeric characters. The first character must be alphabetic or one of the special characters (#, $, or @). This operand is valid only for RACF-defined users. It will be ignored for users not defined to RACF.

OIDCARD
specifies the operator identification card is to be prompted for after the LOGON command has been entered. This operand is valid only for RACF-defined users.

If you are not defined to RACF and enter this keyword, you are prompted for an operator identification card. However, any data you enter is ignored. You can also enter a null line in response to the prompt.

LOGON Command Examples

Example 1

Operation: Start a terminal session.

Known:

- Your user identification and password: WRRID/23XA$MBT
- Your installation does not require an account number or procedure name for logon.

```
logon wrrid/23xa$mbt
```

Example 2

Operation: Start a terminal session.

Known:

- Your user identification and password: WRRID/MO@
- Your account number: 288104
- The name of a cataloged procedure: TS951
- You do not want to receive any broadcast messages.
- Your real storage space requirement: 90K bytes

```
logon wrrid/mo@ acct(288104) proc(ts951)-
 size(90) nonotices nomail
```

Example 3

Operation: Start a terminal session.

Known:

- Your user identification and password: WRRID/XTD18
- Your account number: 347971
- The name of a cataloged procedure: RS832
- Your real storage space requirement: 90K bytes
- The security label for the session: CONFDNTL

```
logon wrrid/xtd18 acct(347971) proc(rs832)-
 size(90) seclabel(confdntl)
```

MVSSERV Command

Use the MVSSERV command to start an TSO/E Enhanced Connectivity Facility session between an IBM Personal Computer (PC) and an IBM host computer running TSO/E on MVS. The TSO/E Enhanced Connectivity Facility is a set of programs that allows a PC user to request services from a host program. The PC requesting program is referred to as the *requester*. The host program that executes the corresponding service is referred to as the *server*. For more information about IBM-supplied servers that you can use with the TSO/E Enhanced Connectivity Facility, see *Introduction to IBM System/370 to IBM Personal Computer Enhanced Connectivity Facilities*.

If you are a VM/PC user and you have issued MVSSERV, you can also issue the two PC commands, DSNMAP and TSO, in your local PC session. The DSNMAP command lets you access MVS sequential and partitioned data sets using the corresponding CMS file names. The TSO command allows you to issue TSO/E commands from your local PC session. The remote MVS system executes the TSO/E commands. See *OS/390 TSO/E VM/PC User's Guide*, for information about the DSNMAP and TSO commands and their syntax.

By using the operands on the MVSSERV command, you can accumulate all, some, or no diagnostic information in a *trace data set*. The diagnostic information includes the following:

- Informational and error messages
- An execution path table that tracks module calls
- Requests and replies sent between the PC and the host.

However, before using MVSSERV, you must have certain pre-allocated data sets. Your installation may have already pre-allocated those data sets for you. They are described in *OS/390 TSO/E Guide to SRPI*. The guide also describes how to write and install servers.

MVSSERV Command Syntax

```
►►──MVSSERV──┬─NOTRACE─┬──────────────────────────────────────────►◄
             │         │
             ├─TRACE───┤
             └─IOTRACE─┘
```

MVSSERV Command Operands

NOTRACE

runs MVSSERV without sending messages to a trace data set. Use NOTRACE for production work. When testing or debugging a program, use TRACE or, preferably, IOTRACE, to obtain complete diagnostic information about the MVSSERV session. NOTRACE is the default.

TRACE

records all terminal messages as well as most diagnostic messages in a trace data set. The TRACE operand requires a pre-allocated trace data set in which to store the messages. Your system programmer may have allocated the data set for you. See *OS/390 TSO/E Guide to SRPI*, for information about how to allocate the trace data set.

IOTRACE
records all terminal messages and all diagnostic messages in a trace data set. In addition to the messages recorded with the TRACE operand, the IOTRACE operand records communication information about data flow and data sent between the host and the PC.

MVSSERV Command Return Codes

Figure 1-28. MVSSERV Command Return Codes

0	Processing successful.
4	Processing unsuccessful.

MVSSERV Command Examples

Example 1

Operation: Start an TSO/E Enhanced Connectivity Facility session program for production.

```
MVSSERV
```

or

```
MVSSERV NOTRACE
```

Example 2

Operation: Start a TSO/E Enhanced Connectivity Facility session and record all terminal messages and all diagnostic messages in the trace data set.

```
MVSSERV IOTRACE
```

Example 3

Operation: Start a TSO/E Enhanced Connectivity Facility session and record all terminal messages and some diagnostic messages in the trace data set.

OUTDES Command

Use the OUTDES command to create or reuse a dynamic output descriptor. An output descriptor defines output characteristics that will be referenced by a SYSOUT data set. OUTPUT JCL statements in the LOGON procedure can also be used to define output descriptors.

The OUTDES operand of the ALLOCATE command and the PRINTDS command allow you to specify a list of installation-defined output descriptors that were created by OUTPUT JCL statements in the LOGON procedure and by the OUTDES command. You can specify up to 128 output descriptors associated with a SYSOUT data set. See the “ALLOCATE Command” on page 1-19 or the “PRINTDS Command” on page 1-233 for more information.

Use operands on the OUTDES command to specify the following information:

- The name of the output descriptor to be created
- The NEW operand to create the output descriptor. The REUSE operand to replace an existing output descriptor.

- Output characteristics. The format and meanings of the output characteristics are described in *OS/390 MVS JCL Reference*.

For information about special considerations when using OUTDES, see *OS/390 MVS Programming: Authorized Assembler Services Guide*.

OUTDES Command Syntax

```
►►─OUTDES─output_descriptor_name─┬─NEW───┬─┬─NOBURST─┬──────────────────►
                                 └─REUSE─┘ └─BURST───┘

►─┬──────────────────
```

```
►──┬─FORMDEF(member_name)─┘  └─FORMS(forms_name)─┘
►──┬─GROUPID(output_group_name)─┘  ┌─INDEX(──┬─1──┬──)─┐
   │                               └─nn───┘        │
►──┬─LINDEX(──┬─1──┬──)─┘  └─LINECT(nnn)─┘
   │          └─nn───┘
►──┬─MODIFY(module_name──┬──────────)─┘  └─PAGEDEF(member_name)─┘
   │                     └─,trc─┘
►──┬─NAME(──┬─preferred_name──────)─┘
   │        └─'preferred_name'─┘
►──┬─NOTIFY(──┬─,──────────┬──)─┘
   │          │ user_id    │
   │          └─'node.user_id'─┘
►──┬─OUTDISP(normal_output_disp,abnormal_output_disp)─┘
►──┬─PIMSG(──┬──────────────────────)─┘  └─PRMODE(process_mode)─┘
   │         │ ┌─YES─┬─,──┬─16──┬─┐
   │         │ └─NO──┘    └─nnn─┘ │
►──┬─PRTY(nnn)─┘  ┌─SYSAREA──┐  └─ROOM(──┬─room_identification──────)─┘
   │              └─NOSYSAREA─┘           └─'room_identification'─┘
►──┬─TITLE(──┬─description_of_output──────)─┘  └─THRESHLD(nnnnnnnn)─┘
   │         └─'description_of_output'─┘
   ┌─NOTRC─┐
►──┤       ├──┬─UCS(ucs_name)─┘  └─WRITER(external_writer_name)─┘
   └─TRC───┘
►──┬─USERLIB(──┬─,──────────┬──)─┘
   │           │ library    │
   │           └─'library_name'─┘
►──┬─USERDATA(──┬─,──────────┬──)─┘  └─OUTBIN(output_bin_id)─┘
   │            │ value      │
   │            └─'value n'─┘
```

OUTDES Command Operands

output_descriptor_name

specifies the name of the output descriptor to be created or reused. This operand is required. Specify 1 to 8 alphanumeric characters for the name. The first character must be alphabetic or one of the special characters #, $, or @.

The OUTDES operand of the ALLOCATE, PRINTDS, and FREE commands refers to the *output_descriptor_name* specified.

NEW | REUSE

NEW specifies that a new output descriptor is to be created. If an output descriptor with the same name exists, the system ends your request unsuccessfully. NEW is the default.

REUSE specifies that if an output descriptor with the same name is found, the new definition replaces the old one. If an output descriptor with the same name does not exist, OUTDES creates a new output descriptor name.

BURST | NOBURST

BURST specifies that 3800 output is to be burst into separate sheets.

NOBURST specifies that the printed 3800 output is to be in continuous fanfold pages. NOBURST is the default.

The following parameters are passed on to the scheduler facility, for more information about these parameters see the OUTDES command in *OS/390 MVS JCL Reference*.

CHARS(*charname***{,...})**
specifies one or more font (character arrangement) tables for printing the SYSOUT data set on a 3800 printer. You can specify up to four table names. Specify 1 to 4 alphabetic, numeric, or special characters #, $, or @ for the character name.

For more information about font (character arrangement) tables, see *IBM 3800 Printing Subsystem Programmer's Guide*.

ADDRESS(*delivery_address***)**
specifies the delivery address for system output (SYSOUT). This address prints on the separator pages. You can specify from 1 to 4 delivery addresses. For each delivery address, you can specify from 1 to 60 EBCDIC characters. Refer to “Coding Rules” on page 1-222 for the valid characters allowed with and without quotes.

BUILDING(*building_identification***)**
specifies the building location associated with the SYSOUT. The building location prints on the separator pages. You can specify from 1 to 60 EBCDIC characters. Refer to “Coding Rules” on page 1-222 for the valid characters allowed with and without quotes.

CKPTLINE(*nnnnn***)**
specifies the maximum number of lines contained in a logical page. Specify a value from 0 to 32767. The system uses this value either for JES checkpointing of printed output or for SNA transmission checkpoints. Use CKPTLINE in combination with the CKPTPAGE operand.

If you do not specify CKPTLINE, JES uses an installation default specified at initialization.

CKPTPAGE(*nnnnn***)**
specifies the maximum number of pages to be printed or transmitted before the next SYSOUT data set checkpoint occurs. Specify a value from 1 to 32767. This value represents the number of pages to be transmitted as a single SNA

chain when data is transmitted to a SNA workstation. Use CKPTPAGE in combination with the CKPTLINE operand.

If you do not specify CKPTPAGE, JES uses the installation default specified at initialization. The default may also indicate whether checkpoints are to be based on page count or time.

CKPTSEC(*nnnnn***)**
specifies the number of seconds that are to elapse between checkpoints of the SYSOUT data set that is printing. Specify a value from 1 to 32767.

If you do not specify CKPTSEC, JES uses the installation default specified at initialization. The default may also indicate whether checkpoints are to be based on page count or time.

CLASS(*output_class***)**
specifies the output class JES is to use for processing the specified SYSOUT data set. Valid output classes are characters A–Z, 0–9, or *. The CLASS parameter is equivalent to the CLASS parameter of the OUTPUT JCL statement. The attributes of each output class, including the default, are defined during JES initialization. Specifying an * requests the output class defined in the MSGCLASS parameter in the JCL for the LOGON procedure that is running. For information about the OUTPUT JCL statement, see *OS/390 MVS JCL Reference*.

Note: When you allocate a SYSOUT data set, JES selects the output CLASS value using the following search order:

1. Output class specified on your user ID at logon
2. Output class specified on the ALLOCATE command
3. Output class specified on a referenced or default output descriptor.

COMPACT(*compaction_table_name***)**
specifies the name of the compaction table to be used when the data set is transmitted to a workstation. Specify a 1 to 8 alphanumeric character symbolic name. If you do not specify COMPACT, compaction is suppressed for the data set.

CONTROL({PROGRAM | SINGLE | DOUBLE | TRIPLE})
specifies the type of forms control to be used.

PROGRAM indicates that the carriage control character of each data record is to control line spacing on the form. PROGRAM is the default. The carriage control characters are given in *MVS/DFP Managing Non-VSAM Data Sets*.

SINGLE indicates forced single spacing.

DOUBLE indicates forced double spacing.

TRIPLE indicates forced triple spacing.

COPIES(*nnn***,(***group_value***))**
specifies the number of copies to be printed for the data set. The number of copies, *nnn*, can range from 1 to 255, subject to an installation limit. The default is 1.

If you use COPIES on a referenced FORMDEF operand (described later), the system ignores the COPIES value.

If you specify group values, the system ignores the individual value, *nnn*, for the 3800 printer. The group values describe how the printed copies are to be grouped (3800 printer only). Each group value specifies the number of copies of each page that are to be grouped together. You can specify up to 8 group values. For example, a group value of 3 causes the first page of a data set to be printed three times before printing is started for the second page, which might also be printed three times, and so forth.

DATACK({BLKCHAR | BLKPOS | BLOCK | UNBLOCK})
specifies whether “print positioning” and “invalid character” data check errors are to be blocked or unblocked for printers accessing through the functional subsystem Print Services Facility (PSF).

BLKCHAR specifies character errors that are not valid are to be blocked. The errors are not reported to PSF. Print positioning errors are reported normally.

BLKPOS specifies print positioning errors are to be blocked, and not reported to PSF.

BLOCK specifies neither print positioning errors nor character errors that are not valid are reported to PSF.

UNBLOCK specifies both print positioning errors and character errors that are not valid are reported to PSF.

If you do not specify DATACK, the DATACK specification from the PSF PRINTDEV statement is used. If it is not specified in the PRINTDEV statement, the default is BLOCK.

DEFAULT | NODEFAULT

DEFAULT specifies that the output descriptor defined by this OUTDES command is the default output descriptor. SYSOUT data sets that do not explicitly refer to an output descriptor use the output characteristics specified in this OUTDES command.

NODEFAULT specifies that an ALLOCATE or PRINTDS command must explicitly reference the output descriptor to use the defined output characteristics specified in this OUTDES command.

Note: When a default output descriptor is defined with a CLASS value, TSO/E commands such as ALLOCATE, PRINTDS, and SMCOPY may use their own default output class instead.

DEPT(*department_identification*)
specifies the department identification associated with the SYSOUT. This department identification prints on the separator pages. You can specify from 1 to 60 EBCDIC characters. Refer to “Coding Rules” on page 1-222 for the valid characters allowed with and without quotes.

DEST(*destination* | *destination*.*user_id*)
specifies the destination of a remote workstation, a user at a specific remote workstation, or an ip-network-address to which the output is routed for processing. You can specify from 1 to 8 characters for either *destination* or *user_id*.

For information about what you can specify for *destination* or *destination.user_id*, see *OS/390 MVS JCL Reference*.

DPAGELBL | NODPAGELBL
specify whether the system is to print a security-related character string on each page of output.

DPAGELBL specifies that the system is to print the character string. The character string is associated with a security label (usually the security label of the user's current session). Your installation determines the character string used.

NODPAGELBL specifies that the character string is to be suppressed. You must have the appropriate RACF access authority to override page labeling. If you need to override DPAGELBL but are unable to, check your installation security procedures or see your RACF security administrator.

FCB(*fcb_name***)**
specifies the name of the forms control buffer (FCB) or image to be used for the 3211, 3203-5, or 3800 printers. The name of the FCB is a 1 to 4 alphanumeric character string consisting of the last 1 to 4 characters of the following:

- FCB2xxxx member for the 3211 or 3203-5 printer or printers supported by System Network Architecture (SNA)
- FCB3xxxx member for the 3800 printer.

For more information about the forms control buffer, see:

- *MVS/DFP Managing Non-VSAM Data Sets*
- *IBM 3800 Printing Subsystem Programmer's Guide*

FLASH(*overlay_name***[,***copies***])**
specifies the name of a forms overlay, which can be used by the 3800 Printing Subsystem. The overlay is “flashed” on a form or other printed information over each page of output. The forms *overlay_name* must be 1 to 4 alphabetic, numeric, or special characters #, $, or @. Optionally, you can specify the number of *copies* on which the overlay is to be printed. The count can range from 0 to 255. To flash no copies, specify a count of zero.

FORMDEF(*member_name***)**
specifies the member name of a partitioned data set containing information that the Advanced Function Printer (AFP 3800-3 or 3800-8) uses to print a data set. The member can contain the following information:

- The overlays that are to be invoked during output processing
- The location on the page where the overlays are to be placed
- The suppressions that can be activated for specified page formats.

The member name contains a maximum of 6 characters, of which the first 2 are predefined by your installation. For the last 4 characters, specify alphabetic, numeric, or special characters #, $, or @.

FORMS(*forms_name***)**
specifies the name of the form on which the output is to be printed. Specify 1 to 8 alphabetic, numeric, or special characters #, $, or @ for the forms name.

If you do not specify FORMS, JES uses the installation default specified at initialization.

GROUPID(*output_group_name***)**
specifies the name to be used by JES to identify which of a job's SYSOUT data sets are to form an output group. The output group name consists of 1 to 8 alphanumeric characters and is selected by the system programmer to define an output group for the job.

INDEX(*nn***)**
specifies a value indicating the data set indexing print offset (to the right) for the 3211 printer with the indexing feature. The width of the print line is reduced by the value of INDEX. Specify a value from 1 to 31. The value 1 indicates flush left. The values 2 to 31 indent the print line by *nn*-1 positions.

The default is 1, which indicates flush left.

LINDEX(*nn***)**
specifies a value indicating the data set indexing print offset (to the left) for the 3211 printer with the indexing feature. The width of the print line is reduced by the value of LINDEX. Specify a value from 1 to 31. The value 1 indicates flush right. The values 2 to 31 move the right margin over by *nn*-1 positions.

The default is 1, which indicates flush right. LINDEX is ignored on printers other than the 3211 printer.

LINECT(*nnn***)**
specifies the number of lines that are to be printed before overflow processing. Specify a value from 0 to 255. If you specify zero, no overflow processing is done.

If you do not specify LINECT, JES obtains the value from one of the following:

1. The LINECT field of the accounting information parameter on the JCL JOB statement.
2. The installation default specified at JES initialization.

MODIFY(*module_name***[,***trc***])**
specifies the name of a copy modification module, which is loaded into the 3800 printing subsystem. This module contains predefined data such as legends, column headings, or blanks. The module specifies where and on which copies the data is to be printed. TSO/E defines and stores the module in the SYS1.IMAGELIB system data set. Specify 1 to 4 alphabetic, numeric, or special characters #, $, or @ for the *module_name*.

The table reference character (TRC) corresponds to the character set(s) specified on the CHARS operand. Values are 1 to 4 alphabetic, numeric, or special characters #, $, or @.

NAME(*preferred_name***)**
specifies the preferred name to be associated with the SYSOUT. The name prints on the separator pages to identify the owner of the SYSOUT. You can specify from 1 to 60 EBCDIC characters. Refer to “Coding Rules” on page 1-222 for the valid characters allowed with and without quotes.

NOTIFY(*user_id***,***node***.***user_id***)**
specifies the user ID that is to receive a print completion message. The message identifies the output that has completed printing and indicates whether

the printing was successful. You can specify 1 to 4 user IDs to which to send the print completion message.

A JES2 system issues the print complete message when all the SYSOUT data sets for an output group have printed. An output group consists of the SYSOUT data sets printed between the output header page and the output trailer page of a job. A JES3 system issues the print complete message when the SYSOUT data sets for the same printer and the same job have printed.

If you do not specify node, NOTIFY defaults to the node where the job was submitted.

OUTDISP(*normal_output_disp***,***abnormal_output_disp***)**
specifies the disposition(s) for the output data set for normal and abnormal program terminations.

normal_output_disp is the disposition for the output data set when the job completes normally. The default for this parameter is WRITE, unless the installation has chosen a different default disposition.

abnormal_output_disp is the disposition for the output data set when the job completes abnormally. This parameter defaults to the disposition specified in normal-output-disposition, if one was specified. Otherwise, it defaults to the installation default (WRITE).

You can specify one of the following for either or both of the positional parameters:

WRITE specifies that the output file is to be deleted immediately after processing.

HOLD specifies that the output data is to be held until released by the TSO/E user or operator. Releasing the output changes its disposition to WRITE.

KEEP specifies that the output file is to be processed. After processing, the data set disposition changes to LEAVE.

LEAVE specifies that the output data is to be held until released by the TSO/E user or operator. Releasing the output changes its disposition to KEEP.

PURGE specifies that the output data set should be deleted before processing.

PAGEDEF(*member_name***)**
specifies the member of a partitioned data set containing information that the Advanced Function Printer (AFP) uses to print the data set. The member can contain the following information:

- Logical page size and width
- Fonts
- Page segments
- Multiple page types or formats
- Lines within a page; for example, line origin, carriage controls, and spacing
- Multiple logical pages on a physical page.

The member name contains a maximum of 6 characters, of which the first 2 are predefined by your installation. For the last 4 characters, specify alphabetic, numeric, or special characters #, $, or @.

PIMSG[(YES,*nnn*) | (NO,*nnn*)]
specifies whether messages are to be printed. Values are 0 through 999. The value specifies that the system is to cancel the printing of the current data set after the specified number of errors have been either:

- Detected by the functional subsystem (FSS), or
- Reported to FSS by the printer.

PIMSG(YES) specifies that messages generated by FSS are to be printed. PIMSG(YES,16) is the default.

PIMSG(NO) specifies that messages are to be suppressed.

If you specify *nnn* as zero, the system does not cancel the printing of the current data set.

PRMODE(*process_mode*)
specifies the process mode to be used to schedule output data sets either to output devices running under a functional subsystem (FSS) or to an output device managed by JES. For a list of valid process modes, contact your system programmer. If you do not specify PRMODE, JES might determine the process mode based on the content of the data. Specify 1 to 8 alphabetic or numeric characters for the process mode.

Use PRMODE to indicate the type of processing you want for a data set. You can use it to direct JES scheduling of this data set to a particular output FSS or JES writer. You can also use PRMODE to request specific processing of a Network Job Entry (NJE) transmitted data set at the destination node without knowing the device name or a SYSOUT class.

PRTY(*nnn*)
specifies the initial selection priority for the data set. Specify a value from 0 to 255, where 0 is the lowest output processing priority and 255 is the highest output processing priority.

ROOM(*room_identification*)
specifies the room identification to be associated with the output data set. This room identification prints on the separator pages. You can specify from 1 to 60 EBCDIC characters. Refer to “Coding Rules” on page 1-222 for the valid characters allowed with and without quotes.

SYSAREA | NOSYSAREA

SYSAREA specifies that the system printable area is to be reserved for printing a character string associated with a security label. SYSAREA is the default.

NOSYSAREA specifies that you want to print on the entire page of output (including the system printable area) for the current printing. Here, the system area is not reserved for printing a security character string. You must have the appropriate RACF access authority to override page labeling. If you need to override the system area but are unable to, check your installation security procedures or see your RACF security administrator.

THRESHLD*(nnnnnnnn)*
specifies the maximum number of records for the sysout data set. For more information see OUTDES command in the *OS/390 MVS JCL Reference*. This applies to JES3 only.

TITLE(*description_of_output***)**
specifies the report title to be associated with the output file. This title prints on the separator pages. You can specify from 1 to 60 EBCDIC characters. Refer to “Coding Rules” on page 1-222 for the valid characters allowed with and without quotes.

TRC | NOTRC

TRC specifies whether the data records contain table reference character (TRC) codes. The codes identify the font to be used to print each record.

A TRC code immediately follows the carriage control character, if any. Its value corresponds to either one of the four fonts specified by CHARS or one of the fonts in the PAGEDEF font list. PAGEDEF allows more than four fonts to be specified.

NOTRC specifies that the data set does not contain TRC codes. NOTRC is the default.

UCS(*universal_character_set_name***)**
specifies the name for the universal character set. Specify up to 4 alphabetic, numeric, or special characters #, $, or @. If you process the print data set through PSF and do not specify CHARS, the system uses the UCS as the font name.

For more information about universal character sets, see *MVS/DFP Managing Non-VSAM Data Sets*.

WRITER(*external_writer_name***)**
specifies a name for use in processing or selecting a SYSOUT data set. If you specify the external writer name, the output data set is written under the control of that external writer rather than the control of JES2 or JES3. The writer name can contain 1 to 8 alphabetic, numeric, or special characters #, $, or @.

For more information about external writers, see *OS/390 MVS Using the Subsystem Interface*.

USERDATA(*value***)**
specifies the installation-defined values for the installation's prescribed processing. If your installation has defined further keywords through installation exits, that optional processing can be requested on the output descriptor with this keyword. Refer to your installation's definition for the intended use of this keyword operand.

You can code up to 16 installation-defined values for this keyword as previously specified by your installation. Each value can be 1 to 60 EBCDIC text characters. Apostrophes around each value are required if the string contains a blank, comma, tab, or semicolon; apostrophes are optional for all other EBCDIC characters. However, if the string contains an apostrophe, code two apostrophes and enclose the entire string in single apostrophes such as `USERDATA('USERKEY1=User's value')`. Null positions such as `USERDATA(`*`value_1`*`,,`*`value_3`*`)` or `USERDATA(,`*`value_2`*`,`*`value_3`*`)` are not allowed.

USERLIB(*library_name* **{,***library_name* **...})**
specifies the data set name(s) of the libraries that contain the Advanced Function Printer (AFP) resources that the Print Services Facility (PSF) uses when processing the SYSOUT data set. The AFP resources that specify how the PSF is to print the SYSOUT data set are:

- Fonts
- Page Segments
- Overlays
- Pagedefs
- Formdefs

Note: This parameter is not supported for PSF/MVS direct-attached printing.

You can use user libraries to maintain secure resources (such as signatures in private data sets), keep resources that are being tested in a private data set during the test period, or personalize and maintain your own library.

PSF searches for resources first in the resource libraries specified by USERLIB, then in the system-defined resources.

library_name specifies the data set name of a library containing the Advanced Function Printer (AFP) resources. The specified library can contain any AFP resources.

The data set name must follow the rules for MVS data set names. See *OS/390 MVS JCL Reference*, for the rules regarding data set names. If the application supports the specification of unqualified data set names and you specify the USERLIB parameter without quotes, the specified data set name is concatenated to the system-defined high-level qualifier.

If you do not specify the USERLIB parameter, only the system and installation print resources are available for use.

A library is a partitioned data set (PDS). Member names are the same as the requested resource. When you create a member, the member name should be unique to all libraries in the search concatenation.

When you use the USERLIB keyword:

- You must have read access (for example, via RACF) to libraries specified by USERLIB.
- Libraries must be cataloged in a catalog that is available to PSF/MVS.
- Libraries must be accessible to PSF while processing the SYSOUT data set.
- Library data sets are dynamically deallocated after PSF has processed the SYSOUT data set.

Refer to *PSF/MVS Application Programming Guide* for more information on the USERLIB keyword.

OUTBIN(*output_bin_id***)** [4]

specifies the media destination for the SYSOUT data set to be processed by JES2 or by JES3. *output_bin_id* specifies the identifier of the printer output bin on the IBM family of Advanced Function Printers supporting multiple output bins.

The valid range for *output_bin_id* is 1 to 65,535. No default value is provided.

If no OUTBIN operand is given, the Print Services Facility (PSF) will stack the output in the default output bin.

[4] The OUTBIN operand on the TSO/E OUTDES command is the equivalent to the OUTBIN keyword of the JCL OUTPUT statement.

If no *output_bin_id* value is provided with the OUTBIN operand (for example, `OUTDES OUT1 OUTBIN` is entered), the system will prompt you for the required value by issuing the following message:

```
ENTER PRINTER OUTPUT BIN ID
```

If a value for *output_bin_id* is specified that is not one of the supported ones, PSF will stack the output in the printer's default output bin and issue a message indicating that the requested bin is not available.

For more information on multiple media destinations and OUTBIN processing see *PSF/MVS Application Programming Guide*.

Coding Rules

- The following characters are valid in strings *with* quotes:
  - Any valid EBCDIC character
  - Two consecutive single quotes to specify a single quote in a quoted string
  - Enclose values that contain blanks in quotes.
  - A semicolon (;) is allowed within a quoted string unless you are issuing the command under ISPF or PCF. When under ISPF or PCF, the semicolon or the alternate character your installation may have specified as the command delimiter, still functions as a command delimiter and may cause a syntax error.
- The following characters are valid in strings *without* quotes:
  - Alphanumeric
  - Special Characters:
    - @ is represented as `X'7C'`
    - $ is represented as `X'5B'`
    - # is represented as `X'7B'`.

    Character sets that use hexadecimal representations other than those listed above may cause an error.

OUTDES Command Return Codes

Figure 1-29. OUTDES Command Return Codes

0	Processing successful.
12	The installation exit requested termination.
16	Processing unsuccessful.

OUTDES Command Examples

Example 1

This example shows how the OUTDES, ALLOCATE, and FREE commands work together to define, reference, and free the dynamic output descriptor.

Operation: Specify the OUTDES command to define the dynamic output descriptor.

Known:

- Name of the new output descriptor: MULTCOPY
- Number of copies: 3
- Pages are to be burst
- Output class: I

```
outdes multcopy copies(3) burst class(i) new
```

Operation: Specify the ALLOCATE command to reference the dynamic output descriptor.

Known:

- Name of the file: SYSPRINT
- Name of the output descriptor: MULTCOPY

```
allocate file(sysprint) new outdes(multcopy)
```

Operation: Specify the FREE command to free the file and the dynamic output descriptor.

Known:

- Name of the file: SYSPRINT
- Name of the output descriptor: MULTCOPY

```
free file(sysprint) outdes(multcopy)
```

Example 2

Operation: Specify the OUTDES command to define the dynamic output descriptor.

Known:

- Name of the output descriptor: ONECOPY
- Number of copies: 1
- No security labels are to be printed on pages.
- Pages are to be burst.

```
outdes onecopy copies(1) nodpagelbl burst new
```

Example 3

Operation: Specify the OUTDES command to reuse the dynamic output descriptor.

Known:

- Name of the output descriptor: MULTCOPY
- Number of copies: 3
- The output will fill the whole page including the system printable area.
- Replace the existing MULTCOPY output descriptor.

```
outdes multcopy copies(3) nosysarea reuse
```

Example 4

Operation: Specify the OUTDES command to print routing information on the separator pages.

Known:

- Name of the new output descriptor: NEWDEST
- Address for delivery is:
  IBM Corporation
  P.O. Box 950
  Poughkeepsie, NY
  12602
- Building to use for distribution: 510
- Data set disposition if the job completes normally: KEEP
- Data set disposition if the job completes abnormally: PURGE
- DEPT to be placed on the report: Payroll
- NAME to be placed on the report: J. Plant
- Room to be placed on the report: Conference Room 'A'
- Title to be placed on the report: OVER-TIME

```
outdes newdest
address('IBM Corporation','P.O. Box 950','Poughkeepsie, NY,
12602') building(510) outdisp(keep,purge) dept(Payroll)
name('J. Plant') room('Conference Room 'A'')
title(OVER-TIME)
```

Example 5

Operation: Specify the OUTDES command with a default normal disposition and a specified abnormal disposition.

Known:

- Name of the new output descriptor: DESTA
- Default data set disposition if the job completes normally: WRITE
- Data set disposition if the job completes abnormally: PURGE

```
outdes desta outdisp(,purge)
```

Example 6

Operation: Specify the OUTDES command with a specified normal disposition and default abnormal disposition.

Known:

- Name of the new output descriptor: DESTB
- Data set disposition if the job completes normally: PURGE
- Default data set disposition if the job completes abnormally: PURGE

```
outdes destb outdisp(purge)
```

Example 7

Operation: Specify the OUTDES command with specified normal and abnormal dispositions.

Known:

- Name of the new output descriptor: DESTC
- Data set disposition if the job completes normally: PURGE

- Data set disposition if the job completes abnormally: HOLD

```
outdes destc outdisp(purge,hold)
```

Example 8

Operation: Specify the OUTDES command to define a user library for PSF resources.

Known:

- Name of the new output descriptor: NEWDESC
- Page definition name to be used: STNDRD
- Libraries to be searched: USER.PRIVATE.RESOURCE and then GROUP.PRIVATE.RESOURCE

```
outdes newdesc new pagedef(stndrd)
userlib('user.private.resource','group.private.resource')
```

OUTPUT Command

Use the OUTPUT command to:

- Direct the output from a job to your terminal. The output includes the job's job control language statements (JCL), system messages (MSGCLASS), and system output (SYSOUT) data sets.
- Direct the output from a job to a specific data set.
- Delete the output for jobs.
- Change the output class(es) for a job.
- Route the output for a job to a remote workstation.
- Release the output for a job for printing by the subsystem.

OUTPUT is a foreground-initiated-background (FIB) command. This command is generally used in conjunction with SUBMIT, STATUS, and CANCEL commands.

The OUTPUT command applies to all jobs whose job names begin with your user identification. Access to jobs whose job names do not begin with a valid user identification must be provided by an installation-written exit routine. The SUBMIT, STATUS, and CANCEL commands apply to batch jobs. You must have special permission to use these commands.

You can simplify the use of the OUTPUT command by including the NOTIFY keyword either on the JOB card or on the SUBMIT command when you submit a job for batch processing. The system notifies you when the job terminates, giving you the opportunity to use the OUTPUT command. MSGCLASS and SYSOUT data sets should be assigned to reserved classes or explicitly held to be available at the terminal.

If your installation uses security labels and security checking, the output for a job has a security label associated with it. To use the OUTPUT command to process job output, the security label you are logged on with must be equal to or greater than the security label at which the job ran.

Note: You cannot specify both the KEEP and DEST keywords while using the OUTPUT command. These two keywords, when specified together with the

OUTPUT command, cause a message to appear stating that the specification is not valid because of conflicting keywords.

OUTPUT Command Syntax

```
►►─┬─OUTPUT─┬─(─┬─jobname──┬─┬──────────┬─┬─)──────────────────────────────►
   └─OUT────┘   │   ,      │ └─(jobid)──┘ │
                └──────────┘              └

►──┬──────────────────────────────────────────────────────────────────────┬──┬─HERE──┬──►
   │                                                                      │  │       │
   └─CLASS(─┬─class_name─┬─)─┘  └─PRINT(─┬─*──────┬─)─┘  └─BEGIN─┘
            │            │               └─dsname─┘          └─NEXT──┘

►──┬─NOPAUSE─┬──┬─NOKEEP─┬──┬─NOHOLD─┬──┬──────────┬──►
   └─PAUSE───┘  └─KEEP───┘  └─HOLD───┘  └─DELETE───┘

►──┬──────────────────────────────┬──┬──────────────────────────────┬──►◄
   └─NEWCLASS(class_name)─┘  └─DEST(remote_station_id)─┘
```

OUTPUT Command Operands

(*jobname* (*jobid*))

specifies one or more names of batch or foreground jobs. The job name for foreground session is user ID. Each job name must begin with your user identification and, optionally, can include one or more additional characters unless the default IBM-supplied installation exit that scans and checks the job name and user identification is replaced by a user-written routine. The system processes the held output from the jobs identified by the job name list.

To avoid duplicate job names, you should include the optional job ID for uniqueness. The job ID is a unique job identifier assigned by the job entry subsystem (JES) at the time the job was submitted to the batch system. Currently the only valid forms of job identifiers (*jobid*) assigned by JES are:

`JOBnnnnn` or `Jnnnnnnn` – Jobs
`STCnnnnn` or `Snnnnnnn` – Started Tasks
`TSUnnnnn` or `Tnnnnnnn` – TSO Users

CLASS(*class_name*)

specifies the name or names of the output classes to be searched for output from the jobs identified in the job name list. If you do not specify the name of a class, all held output for the jobs are available. A class name is a single character or digit (A-Z or 0-9).

PRINT(*dsname* | *)

specifies the name of the data set to which the output is to be directed. If unqualified, the prefix is added to and the qualifier OUTLIST is appended to the data set name. You can substitute an asterisk for the data set name to indicate that the output is to be directed to your terminal. If you omit both the data set name and the asterisk, the default value is the asterisk. PRINT is the default value if you omit PRINT, DELETE, NEWCLASS, DEST, and HOLD/NOHOLD.

If the PRINT data set is not pre-allocated, RECFM defaults to FBS, LRECL defaults to 132, and the BLKSIZE defaults to 3036.

BEGIN | HERE | NEXT

BEGIN indicates output operations for a data set are to start from the beginning of the data set regardless of whether it has been checkpointed.

HERE indicates output operations for a data set that has been checkpointed are to be resumed at the approximate point of interruption. If the data set is not checkpointed, it is processed from the beginning. If you omit HERE, BEGIN, and NEXT, then HERE is the default.

NEXT indicates output operations for a data set that has been previously checkpointed are to be skipped. Processing resumes at the beginning of non-checkpointed data sets.

CAUTION:
The checkpointed data sets that are skipped are deleted unless the KEEP operand is specified.

PAUSE | NOPAUSE

PAUSE indicates output operations are to pause after each SYSOUT data set is listed to allow you to enter a SAVE or CONTINUE subcommand. Pressing the Enter key after the pause causes normal processing to continue. This operand can be overridden by the NOPAUSE operand of the CONTINUE subcommand. If PAUSE is not specified, then NOPAUSE is the default.

NOPAUSE indicates output operations are not to be interrupted. This operand can be overridden by the PAUSE operand of the CONTINUE subcommand.

KEEP | NOKEEP

KEEP specifies the SYSOUT data set is to remain enqueued after printing (see also HOLD and NOHOLD).

NOKEEP specifies the SYSOUT data set is to be deleted after it is printed. If neither KEEP nor NOKEEP is specified, then NOKEEP is the default.

HOLD | NOHOLD

HOLD specifies the kept SYSOUT data set is to be held for later access from the terminal.

Note: HOLD may be overridden if DEST(*remote_station_id*) specifies a network job entry (NJE) node. For example,

```
TSO OUTPUT job DEST(DETROIT) HOLD
```

issued on a node in TAMPA will not hold the output.

For JES3 users, HOLD may also be overridden if NEWCLASS(*class_name*) specifies a class defined on a JES3 SYSOUT initialization statement with a default NJE networking node DEST. For example,

```
SYSOUT,CLASS=D,TYPE=PRINT,DEST=DETROIT
```

is included in the JES3 initialization stream.

```
TSO OUTPUT job NEWCLASS(D) HOLD
```

issued on a node in TAMPA will not hold the output.

Note to JES3 Users: To view the output, you must specify an output class that has been defined as HOLD (for TSO/E) or RSVD (reserved) on the DD statement. If you specify RSVD class, then MSGCLASS and SYSOUT class must be the same as the RSVD class. For more information, see *OS/390 JES3 Initialization and Tuning Guide*.

NOHOLD specifies the kept SYSOUT data set be released for printing by the subsystem. NOHOLD is the default.

DELETE
specifies classes of output specified with the CLASS operand are to be deleted.

NEWCLASS(*class_name***)**
is used to change one or more SYSOUT classes to the class specified by the *class_name* subfield.

DEST(*remote_station_id***)**
routes SYSOUT classes to a remote workstation specified by the station ID subfield. The station ID is 1 to 8 characters in length.

Output Sequence

Output is produced according to the sequence of the jobs that are specified, then by the sequence of classes that are specified for the CLASS operand. For example, assume that you want to retrieve the output of the following jobs:

```
//JWSD581      JOB          91435,MSGCLASS=X
//             EXEC         PGM=IEBPTPCH
//SYSPRINT     DD           SYSOUT=Y
//SYSUT1       DD           DSNAME=PDS,UNIT=3330,
//             VOL=SER=11112,LABEL=(,SUL),
//             DIsp=(OLD,KEEP),
//             DCB=(RECFM=U,BLKSIZE=3036)
//SYSUT2       DD           SYSOUT=Z
//SYSIN        DD           *
             PRINT TYPORG=PS,TOTCONV=XE
             LABELS DATA=NO
/*
//JWSD582      JOB          91435,MSGCLASS=X
//             EXEC         PGM=IEHPROGM
//SYSPRINT     DD           SYSOUT=Y
//DD2          DD           UNIT=3330,VOL=SER=333000,
//             DISP=OLD
//SYSIN        DD           *
             SCRATCH VTOC,VOL=3330=333000
/*
```

To retrieve the output, you enter:

```
output (jwsd581 jwsd582) class (x y z)
```

Your output is displayed in the following order:

1. Output of job JWSD581
   a. class X (JCL and messages)

   b. class Y (SYSPRINT data)
   c. class Z (SYSUT2 data)

2. Output of job JWSD582

   a. class X (JCL and messages)
   b. class Y (SYSPRINT data)
   c. message (NO CLASS Z OUTPUT FOR JOB JWSD582)

If no classes are specified, the jobs are processed as entered. Class sequence is not predictable.

Subcommands for the OUTPUT Command

Subcommands for the OUTPUT command are: CONTINUE, END, HELP, and SAVE. When output has been interrupted, you can use the CONTINUE subcommand to resume output operations.

Interruptions causing subcommand mode occur when:

- Processing of a SYSOUT data set completes and the PAUSE operand was specified with the OUTPUT command.
- You press the attention key.

Pressing the attention key purges the input/output buffers for the terminal. Data and system messages in the buffers at this time may be lost.

Although the OUTPUT command attempts to back up 10 records to recover the lost information, results are unpredictable due to record length and buffer size. You might see records repeated or notice records missing if you attempt to resume processing of a data set at the point of interruption (using the HERE operand of CONTINUE, or in the next session, using HERE on the command).

You can use the SAVE subcommand to copy a SYSOUT data set to another data set for retrieval by a different method. Use the END subcommand to terminate OUTPUT. The remaining portion of a job that has been interrupted is kept for later retrieval at the terminal.

Checkpointed Data Set

A data set is checkpointed if it is interrupted during printing and never processed to end-of-data during a terminal session.

Interruptions which cause a data set to be checkpointed occur when:

- Processing terminates in the middle of printing a data set because of an error or abend condition.
- The attention key is pressed during the printing of a data set and the CONTINUE NEXT subcommand is entered. The KEEP operand must be present or the data set is deleted.
- The attention key is pressed during the printing of a data set and the END subcommand is entered.

OUTPUT Command Return Codes

Figure 1-30. OUTPUT Command Return Codes

0	Processing successful.
12	Processing unsuccessful. An error message has been issued.

OUTPUT Command Examples

Example 1

Operation: Direct the held output from a job to your terminal. Skip any checkpointed data sets.

Known:

- The name of the job: SMITH2
- The job is in the system output class: SYSOUT=X
- Output operations are to be resumed with the next SYSOUT data set or group of system messages that have never been interrupted. You want the system to pause after processing each output data set.

```
output smith2 class(x) print(*) next pause
```

Example 2

Operation: Direct the held output from two jobs to a data set so that it can be saved and processed at a later date.

Known:

- The name of the jobs: JANA JANB
- The name for the output data set: JAN.AUGPP.OUTLIST

```
output (jana,janb) class(r,s,t) print(augpp)
```

Example 3

Operation: Change an output class.

Known:

- The name of the job: KEAN1
- The existing output class: SYSOUT=S
- The new output class: T

```
output kean1 class(s) newclass(t)
```

Example 4

Operation: Delete the held output instead of changing the class (see “Example 3”).

```
out kean1 class(s) delete
```

Example 5

Operation: Retrieve SYSOUT data from your session at your terminal.

Known:

- The TSO/E user ID: SMITH
- A JES held SYSOUT class: X
- The filename of the SYSOUT data set: SYSUT2

```
free file(sysut2) sysout(x)
status smith
SMITH(TSU0001) EXECUTING
output smith(tsu0001)
```

OUTPUT Subcommands (Overview)

The subcommands of the OUTPUT command are:

Figure 1-31. Subcommands and Functions of the OUTPUT Command

CONTINUE	Resumes output operations that have been interrupted.
END	Ends the OUTPUT command.
HELP	Obtains the syntax and function of the OUTPUT subcommands.
SAVE	Copies the SYSOUT data set from the spool to the named data set.

OUTPUT—CONTINUE Subcommand

Use the CONTINUE subcommand to resume output operations that have been interrupted.

Interruptions occur when:

- An output operation completes and the PAUSE operand was specified with the OUTPUT command.
- You press the attention key.

OUTPUT—CONTINUE Subcommand Syntax

```
                    ┌─NEXT──┐
►►──┬─CONTINUE─┬──┼───────┼──┬──────────┬──────────────────────────────►◄
    └─C────────┘  ├─BEGIN─┤  ├─PAUSE───┤
                  └─HERE──┘  └─NOPAUSE─┘
```

OUTPUT—CONTINUE Subcommand Operands

BEGIN
indicates output operations are to be resumed from the beginning of the data set being processed at the time of interruption.

HERE
indicates output operations are to be resumed at a point of interruption. If the attention key is pressed, processing resumes at the approximate point of interruption in the current data set. If end- of-data is reached and PAUSE is specified, processing resumes at the beginning of the next data set (even if it is checkpointed and HERE is specified on the command).

NEXT
halts all processing of the current data set and specifies that output operations are to be resumed with the next data set.

The next data set is determined by the BEGIN, HERE, or NEXT operand on the OUTPUT command. If BEGIN is specified on the command, processing

starts at the beginning of the next data set. If HERE is specified, processing starts at the checkpoint of the next data set or at its beginning, if no checkpoint exists. If NEXT is specified, processing starts at the beginning of the next non-checkpointed data set. If BEGIN, HERE, and NEXT are omitted, then NEXT is the default.

Note: The interrupted and/or skipped data set is deleted unless you specified KEEP on the OUTPUT command.

PAUSE
indicates output operations are to pause after each data set is processed to allow you to enter a SAVE subcommand. Pressing the Enter key after the pause causes normal processing to continue. You can use this operand to override a previous NOPAUSE condition for output.

NOPAUSE
indicates output operations are not to be interrupted. You can use this operand to override a previous condition for output.

OUTPUT—CONTINUE Subcommand Examples

Example 1

Operation: Continue output operation with the next SYSOUT data set.

```
continue
```

Example 2

Operation: Start output operations over again with the current data set being processed.

```
continue begin
```

OUTPUT—END Subcommand

Use the END subcommand to terminate the operation of the OUTPUT command.

OUTPUT—END Subcommand Syntax

```
►►──END──────────────────────────────────────────────────────────►◄
```

OUTPUT—HELP Subcommand

Use the HELP subcommand to obtain the syntax and function of the OUTPUT subcommands. For a description of the HELP command syntax and function, see the “HELP Command” on page 1-167.

OUTPUT—SAVE Subcommand

Use the SAVE subcommand to copy the SYSOUT data set from the spool data set to the named data set. If you use the data set with the PRINT operand, then it must be a valid data set. There is no restriction against saving JCL. To use SAVE, you should specify the PAUSE operand on the OUTPUT command. SAVE does not save the entire SYSOUT output of the job, only the data set currently being processed.

OUTPUT—SAVE Subcommand Syntax

```
►►──┬─SAVE─┬──data_set_name──────────────────────────────────────►◄
    └─S────┘
```

OUTPUT—SAVE Subcommand Operand

data_set_name
specifies the new data set name to which the SYSOUT data set is to be copied.

OUTPUT—SAVE Subcommand Examples

Example 1

Operation: Save an output data set.

Known:

- The name of the data set: ADT023.NEWOUT.OUTLIST

```
save newout
```

Example 2

Operation: Save an output data set.

Known:

- The name of the data set: BXZ037A.OLDPART.OUTLIST
- The data set member name: MEM5
- The data set password: ZIP

```
save oldpart(mem5)/zip
```

PRINTDS Command

Use the PRINTDS command to format and print data sets on any printer defined to the Job Entry System (JES). PRINTDS allows you to:

- Print data sets that have the following characteristics:
  - Sequential or partitioned (print the entire data set or selected members) Different types of control characters cannot be mixed within a sequential data set or in a PDS. However, different members of a PDS can contain different types of control characters. For more information about control characters, see cchar on page 1-237.
  - Movable or unmovable
  - Fixed or variable record format
  - Logical record length not greater than 32,760.
  - Resides on DASD
- Reference output descriptors.
- Format the data and either print it or copy it to a data set.
- Print data sets that contain Document Composition Facility (DCF) data.

Note: Generation data group (GDG) data sets are not supported by PRINTDS.

There are three types of operands you can specify on the PRINTDS command:

- The name and characteristics of the data set(s) or file to be printed
- The formatting and output characteristic operands
- The OUTDES operand referring to a previous output descriptor.

Process for the Input Data Set or File

Each data set you specify is processed as follows:

- If you specify a file, the data sets within the file concatenation are allocated and printed separately. They are treated as if you had specified a list of data sets to be printed. After the system prints the file, it does not deallocate the file.
- If you formatted the data set that contains Document Composition Facility (DCF) output, PRINTDS examines the first line of the data set and extracts the device and font information from that line, such as:

  ```
  SCRIPT/VS Rx.x.x;  DEVICE device CHARS font1 (... font4)
  ```

  If PRINTDS finds page mode data in the data set, the device and font information will not be extracted.

  PRINTDS associates the specified font information with the SYSOUT data set. If you specify the CHARS operand on the PRINTDS command, the system uses the values specified on the CHARS operand when it allocates the SYSOUT data set rather than the values from the DCF data set.

Output for a Data Set or File

The system prints a data set or file using the formatting operands you specified. It prints a title that contains the name of the data set and the page number on every page, unless the NOTITLE operand is specified or defaulted.

If the output attributes of a member are different from the previous member, such as a Document Composition Facility file, then the system prints it separately. If you specify multiple input data sets or members with unlike attributes, then the system creates more than one SYSOUT data set. If you specify more than one output descriptor using the OUTDES operand, then the system also creates more than one SYSOUT data set.

If you direct the output to a data set, the system does not allocate SYSOUT data sets. The formatted output is placed in the data set specified on the TODATASET operand. If the member or data set does not exist, PRINTDS creates it.

Introductory information about how to use the PRINTDS command is described in *OS/390 TSO/E User's Guide*.

PRINTDS Command Syntax

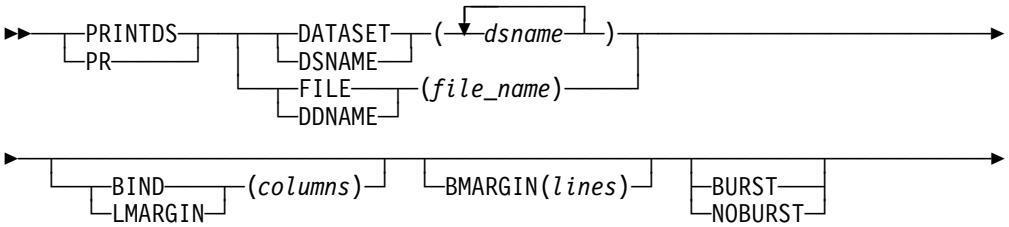

```
►──┬─CCHAR──────┬──┬──────────────────────────────────────────────┬──►
   ├─SINGLE─────┤  │                   ┌──────────────────────┐   │
   ├─DOUBLE─────┤  └─CHARS(──┬──────────┬──character_name──────┬─)─┘
   └─TRIPLE─────┘            │          │                      │
                             │          └──,──────────────────┘
                             └──────────────────────────────────┘

►──┬──────────────────────────────────────────────────────────────────►
   │  ┌─CLASS──┬─┐
   └──┤        │ ├──(output_class)──┘
      └─SYSOUT─┘ │

►──┬──────────────────────────────────────────────────────────────────►
   └─COLUMNS(start_1──┬──────────────────────────────────────┬──)──┘
                      │                   ┌──────────────────┐ │
                      └─:end_1──┬──────────┬──,start_2:end_2──┬─┘
                                │          │                  │
                                └──────────┘

►──┬──────────────────────────────────────────────────────────────────►
   └─COPIES(nnn──┬──────────────────────────────────────┬──)──┘  ┌─DCF──┬──┐
                 │                   ┌──────────────────┐ │      └─NODCF────┘
                 └─,(──┬──────────┬──┬──group_value──────┬─)─┘
                       │          │  │                   │
                       └──,───────┘  └───────────────────┘

►──┬──────────────────────────────────────────────────────────────────►
   └─DEST(──┬─destination──────────┬──)──┘  └─FCB(fcb_name)──┘
            └─destination.user_id──┘

►──┬──────────────────────────────────────────────────────────────────►
   └─FLASH(overlay_name,──┬──────────┬──)──┘  ┌──────────────────────┐
                          └─copies───┘        │  ┌─FOLD─────┬──┐      │
                                              └──┤          │  ├──(width)──┘
                                                 └─TRUNCATE─┘  │
                                                               │

►──┬──────────────────────────────────────────────────────────────────►
   │                          ┌─NOHOLD─┬──┬──────────────────────────┬
   └─FORMS(forms_name)────────┤        │  │                          │
                              └─HOLD───┘  └─LINES(line_1──┬──────────┬──)──┘
                                                          └─:line_2──┘

►──┬─ALL─────────┬──┬──────────────────────────────────────────────►
   ├─MEMBERS─────┤  └─MODIFY(module_name──┬──────────┬──)──┘
   └─DIRECTORY───┘                        └─,trc─────┘

►──┬─NONUM──────────────────────────────────────────────────────────►
   │  ┌─NUM──┬─┐
   └──┤      │ ├──(location,length)──┘
      └─SNUM─┘ │

►──┬──────────────────────────────────────────────────────────────────►
   │                   ┌──────────────────────┐
   └─OUTDES(──┬──────────┬──output_descriptor_name──┬─)──┘  └─PAGELEN(lines)──┘
              │          │                          │
              └──,───────┘                          └──────────────────────────┘

►──┬─TITLE───────┬──┬──────────────────────────────────────────────►
   └─NOTITLE─────┘  └─TMARGIN(lines)──┘  ┌─TODATASET──┬──┐
                                         └─TODSNAME───┘  ├──(dsname)──┘
                                                         │

►──┬─TRC─────────┬──┬──────────────────────────────────────────────►◄
   └─NOTRC───────┘  └─UCS(ucs_name)──┘  └─WRITER(external_writer_name)──┘
```

PRINTDS Command Operands

DATASET(*dsname*) | DSNAME(*dsname*)

specifies either one or more data sets or members to be printed. If you do not specify DATASET, DSNAME, FILE, or DDNAME, the system prompts you to enter the name. The data set name must include the descriptive (rightmost) qualifier and can contain a member name in parentheses.

If the data set is password protected, suffix the data set name with a slash (/) and the password.

The data set must have a data set organization of PO or POU for partitioned or partitioned unmovable, PS or PSU for sequential or sequential unmovable, record formats of fixed or variable, and logical record length not greater than 32,760.

Spanned records or records with track overflow are not supported. You can specify up to 255 data sets.

Either DATASET, or DSNAME, or FILE, or DDNAME is required. If you do not specify FILE, DDNAME, DATASET, or DSNAME, the system prompts you to enter the name.

FILE(*file_name*) | DDNAME(*file_name*)

specifies the name of the file to be printed. The data sets within the concatenation are printed as if you had specified the DATASET operand followed by the list of the data set names that make up the file.

You cannot use the FILE operand to print a data set that is protected by a READ password. Use the DATASET or DSNAME operand.

Either FILE, or DDNAME, or DATASET, or DSNAME is required. If you do not specify FILE, DDNAME, DATASET, or DSNAME, the system prompts you to enter the name.

BIND(*columns*) | LMARGIN(*columns*)

specifies the number of columns that the output is to be shifted to the right. LMARGIN is an alias for BIND. You can specify between 0 to 255 columns. If you print a partitioned data set, the BIND or LMARGIN value applies only when members are printed. The system ignores the BIND value when the directory portion of the partitioned data set is printed.

Do not use LMARGIN with page mode data. An error occurs if LMARGIN is specified with page mode data.

BIND(0) is the default. A non-zero BIND value is mutually exclusive with the DIRECTORY operand.

BMARGIN(*lines*)

specifies the number of blank lines to be left at the bottom of each printed page. You can specify a minimum of 0 lines, and a maximum of 6 lines less than the value specified or defaulted for the PAGELEN operand.

BMARGIN(0) is the default. A non-zero BMARGIN value is mutually exclusive with the CCHAR or DIRECTORY operand.

BURST | NOBURST

specifies whether 3800 output is to be bursted into separate sheets. BURST or NOBURST is allowed only when you print data to a SYSOUT data set. Therefore, you cannot specify BURST or NOBURST when you specify the TODATASET operand.

NOBURST specifies that the printed output is to be in continuous fanfold pages.

NOBURST is the default for a SYSOUT data set.

CCHAR | SINGLE | DOUBLE | TRIPLE

CCHAR specifies that ANSI or machine code spacing control characters existing in the data set are to be used for inter-record spacing. If you specify CCHAR, the system assumes the default of NOTITLE.

SINGLE specifies that all non-blank lines from the input data set are to be printed with single spacing.

DOUBLE specifies that all non-blank lines from the input data set are to be printed with double spacing.

TRIPLE specifies that all non-blank lines from the input data set are to be printed with triple spacing. If you specify SINGLE, DOUBLE, or TRIPLE, the system ignores blank lines from the input data set.

If you specify CCHAR, SINGLE, DOUBLE, or TRIPLE, the record format recorded in the data set's DSCB is not used to determine the carriage control type in the input. Instead, the first character in the first record of each input data set or member is examined to determine the type of carriage control. If it is a valid machine carriage control character, then the entire data set or member is assumed to have machine carriage control spacing. Otherwise, ANSI carriage control spacing is assumed.

If you do not specify CCHAR, SINGLE, DOUBLE, or TRIPLE, the record format recorded in the data set's DSCB indicates whether the data set contains carriage control characters, and if so, the type.

If you do not specify CCHAR, PRINTDS determines the type of data set (ANSI or MCC) from the DSCB.

If you specify CCHAR, PRINTDS checks if the data set contains a valid MCC code. If it does not find a valid MCC, PRINTDS treats the data set as an ANSI type data set.

Do not specify SINGLE, DOUBLE, or TRIPLE for an input data set that contains ANSI or machine carriage control characters because the inter-record spacing for such a data set is under control of the carriage control characters within the data set.

If you use the COLUMNS, NUM, or SNUM operands with CCHAR, column 1 refers to the first character after the carriage control character. If you specify the TRC operand, then column 1 is the first character after the table reference character.

Figure 1-32 contains the valid machine printer carriage control characters.

Figure 1-32 (Page 1 of 2). Valid Machine Printer Carriage Control Characters

Print Line and Then Act	Action	Act Immediately and Then Print
--	NOOP (Comment line, no print)	X'03'

Figure 1-32 (Page 2 of 2). Valid Machine Printer Carriage Control Characters

Print Line and Then Act	Action	Act Immediately and Then Print
X'01'	Print only (no space)	--
X'09'	Space 1 line	X'0B'
X'11'	Space 2 lines	X'13'
X'19'	Space 3 lines	X'1B'
X'89'	Skip to channel 1	X'8B'
X'91'	Skip to channel 2	X'93'
X'99'	Skip to channel 3	X'9B'
X'A1'	Skip to channel 4	X'A3'
X'A9'	Skip to channel 5	X'AB'
X'B1'	Skip to channel 6	X'B3'
X'B9'	Skip to channel 7	X'BB'
X'C1'	Skip to channel 8	X'C3'
X'C9'	Skip to channel 9	X'CB'
X'D1'	Skip to channel 10	X'D3'
X'D9'	Skip to channel 11	X'DB'
X'E1'	Skip to channel 12	X'E3'
X'5A'	Defines page mode line of data	--

CHARS(*character_name***{,...})**
specifies the name of the character arrangement table (font). You can specify up to four fonts. Specify 1 to 4 alphabetic, numeric, or special characters #, $, or @ for the font. If you specify CHARS, the system assumes the TRC operand, not the default of NOTRC.

Note: To define a single font to be used to print a data set that contains no TRC codes, specify CHARS. To prevent the system from interpreting the first character of each printed line as a TRC code, also specify NOTRC.

CLASS(*output_class***) | SYSOUT(***output_class***)**
specifies the output class JES is to use for processing the specified data set. Valid output classes are characters A-Z or 0-9. The default output class is A. SYSOUT is an alias for CLASS.

COLUMNS(*start_1***[:***end_1***[,***start_2***:***end_2***,...]]**
specifies the columns of the data set to printed. You can specify the columns as pairs of numbers in the format *start:end*. If you do not specify *end*, the system assumes the last column of the input as end. You can specify up to 32 column pairs.

If your input data set contains a carriage control character or a table reference character (TRC), column 1 refers to the first character position after the carriage control character or the table reference character.

COPIES(*nnn***[,(***group_value***,...)])**
specifies the number of copies to be printed for the data set. The number of copies, *nnn*, can range from 1 to 255, subject to an installation limit.

If you specify group values, the system ignores the individual value, *nnn*, for the 3800 printer. The group values describe how the printed copies are to be grouped (3800 printer only). Each group value specifies the number of copies of each page that are to be grouped together. You can specify up to 8 group values. For example, a group value of 3 causes the first page of a data set to be printed three times before printing is started for the second page, which might also be printed three times, and so forth.

COPIES(1) is the default value for a SYSOUT data set.

DCF | NODCF

specifies whether the font information is to be extracted from the first line of a DCF formatted data set. For example,

```
SCRIPT/VS Rx.x.x;  DEVICE device CHARS font1 (... font4)
```

The system finds and uses the font information when the data set is printed. If it is page mode data, the device and font information will not be extracted.

NODCF specifies that the font information is not to be extracted from the data set.

If you specify DCF, the system assumes NOTITLE. If you specify DCF and the data set is found to have been formatted by DCF, then machine carriage control spacing is also assumed. However, if you specify DCF and the data set is not formatted by DCF, the system ignores the DCF operand. DCF is the default for a SYSOUT data set.

If you specify DCF and the FILE operand, the first line of each data set within the file concatenation is examined for the DCF information. The data sets making up the file are processed as if you had specified a list of separate data sets.

If DCF is specified or defaulted and the first record of the data set indicates that the data has been formatted by DCF for a 1403 printer, the system assumes NOTRC unless you specified TRC. In all other cases, DCF data sets are assumed to have been formatted with TRC characters unless you had explicitly specified NOTRC.

Note: If you specify DCF, the input data set might not have been formatted by the Document Composition Facility. PRINTDS checks only the first record to determine whether the data set should be processed as a DCF data set. If you specify NODCF, PRINTDS does not check the data set.

DEST{*destination* **|** *destination***.***user_id***}**

specifies the destination of a remote workstation or a user at a specific remote workstation to which the output is routed for processing. You can specify from 1 to 8 characters for either *destination* or *user_id*.

For information on the destination format systemname.printername, see *OS/390 JES2 Initialization and Tuning Guide*.

Or, if you specified a default destination in the SYS1.UADS data set, the DEST output descriptor overrides the destination in SYS1.UADS. *OS/390 JES3 Initialization and Tuning Guide*.

FCB(*fcb_name***)**
specifies the name of the forms control buffer (FCB) or image to be used for the 3211, 3203-5, or 3800 printers. The name of the FCB is a 1 to 4 alphanumeric character string consisting of the last characters of the following:

- FCB2xxxx member for the channel attached line printers (3203, 3211, 3262, 4245. 4248, 6262) or printers supported by System Network Architecture (SNA)
- FCB3xxxx member for the 3800 printer.
- FCB4xxx member for the 3262, 4248 or 6262 printer

Your installation supplies a default for the SYSOUT class or for the printers.

FLASH(*overlay_name***[,***copies***])**
specifies the name of a forms overlay, which can be used by the 3800 Printing Subsystem. The overlay is “flashed” on a form or other printed information over each page of output. The forms *overlay_name* must be 1 to 4 alphabetic, numeric, or special characters #, $, or @. Optionally, you can specify the number of *copies* on which the overlay is to be printed. The count can range from 0 to 255. To flash no copies, specify a count of zero.

FOLD(*width***) | TRUNCATE(***width***)**
specifies the length of the printed line if the input line is longer than the output line.

FOLD specifies that *width* is the maximum length of the output line. Records that are too long to be printed within that length are wrapped around onto subsequent lines.

TRUNCATE specifies that *width* is the maximum length of the output line. Records that are too long to be printed within that length are truncated to fit on one line.

If the input data set contains carriage control characters, the data being folded or truncated begins after the carriage control character. If the input data set has a table reference character, or a carriage control character and table reference character, the data being folded or truncated begins after the table reference character.

FORMS(*forms_name***)**
specifies the name of the form on which the output is to be printed. Specify 1 to 4 alphabetic, numeric, or special characters #, $, or @ for the forms name.

HOLD | <u>NOHOLD</u>

HOLD specifies whether the output is to be held in the JES held output queue. NOHOLD specifies that the output be made available for printing immediately.

<u>NOHOLD</u> is the default for a SYSOUT data set.

LINES(*line_number_1***[:***line_number_2***])**
specifies the range of lines to be printed, either in:

- Embedded line number fields using the NUM or SNUM operand, or
- Relative records using the NONUM operand.

If you specify the first line number value only, printing continues from that line to the last line of the data set. Only lines with line number values within the specified range are printed. For example, `LINES(10:20)` causes the 10th through 20th lines of the data set to be printed. However, if the data set has at least 10 lines, but fewer than 20 lines, all lines from the 10th to the end of the data set are printed. If the data set has fewer than 10 lines, no lines are printed.

The line number values you specify for LINES are used for each printed data set. For example, `LINES(1:10)` prints the first 10 lines of every sequential data set and member specified. It also prints the first 10 lines of each member for every partitioned data set specified.

MEMBERS | DIRECTORY | ALL
specifies which portion of a partitioned data set is to be printed.

MEMBERS specifies that the system is to print only the data contained in the members of the indicated partitioned data set, without the directory. The system prints the members in alphabetical order.

DIRECTORY specifies that the system is to print only the directory.

ALL specifies that the system is to print both the data contained in the members and the directory. The members are printed first followed by the directory. ALL is the default.

If you specify MEMBERS, DIRECTORY, or ALL when printing a sequential data set or a specific member of a partitioned data set, the system ignores these operands. If you print a partitioned data set with the ALL operand, you can specify certain operands that are normally *not* allowed when you specify DIRECTORY. The following operands affect the formatting and printing of members of partitioned data sets, but not the directory:

BIND
COLUMNS
DCF or NODCF
FOLD or TRUNCATE
LINES
NUM or SNUM or NONUM
SINGLE or DOUBLE or TRIPLE
BMARGIN
TMARGIN
NOTITLE

The output of each page of a partitioned data set directory contains the following:

- Two directory lines
- A blank line
- A directory header line
- Another blank line
- One or more lines of directory information.

Each directory page has at least 6 lines, unless the partitioned data set has no members. If the partitioned data set has no members, only the directory title lines and header line are printed.

If you specify NOTITLE with the ALL operand, the members of the partitioned data set and other sequential data sets are printed without title lines. However, the directory portion of the partitioned data set is printed with the directory title lines on each page.

MODIFY(*module_name***[,***trc***])**
specifies the name of a copy modification module, which is loaded into the 3800 printing subsystem. This module contains predefined data such as legends, column headings, or blanks. The module specifies where and on which copies the data is to be printed. The system defines and stores the module in the SYS1.IMAGELIB system data set. Specify 1 to 4 alphanumeric characters for the *module_name*.

The table reference character (TRC) corresponds to the character set(s) specified on the CHARS operand. Values are from 0 to 3.

NUM(*location***,***length***) | SNUM(***location***,***length***) | NONUM**
specifies where line numbers are located in the data set and whether PRINTDS is to print the line numbers.

NUM indicates that the data set contains a line number field to be printed. The location value is the column location of the beginning of the line number field. The length value is the number of columns that the line number field occupies. You can specify up to 8 for the length value. Both the location value and the length value are required.

SNUM indicates the data set contains a line number, but the line number is *not* to be printed. The location value is the column location of the beginning of the line number field. The length value is the number of columns that the line number field occupies. You can specify up to 8 for the length value. Both the location value and the length value are required.

If you specify either NUM or SNUM, the line number field in each record of the input data set must contain only valid decimal digits, 0 to 9. If the line number field contains characters other than 0 to 9, printing of the data set ends. If you are printing a list of data sets, printing continues with the next data set. If you are printing members of a partitioned data set, printing continues with the next member.

NONUM indicates that PRINTDS is to treat records as though there are no embedded line numbers. NONUM is the default.

If the input data set records contain a carriage control character or table reference character, the column location refers to the first character after the carriage control character or table reference character.

OUTDES(*output_descriptor_name***[, ...])**
specifies a list of installation-defined output descriptors that were created by OUTPUT JCL statements in the LOGON procedure or by the TSO/E OUTDES command. The characteristics of each output descriptor are associated with a SYSOUT data set. Specifying OUTDES eliminates the need to supply information related to the printer or the type of printing to be done. You can specify up to 128 output descriptors. Specify 1 to 8 alphanumeric characters for the name. The first character must be alphabetic or one of the special characters #, $, or @.

If you specify operands with an output descriptor, such as BURST, CHARS, COPIES, and DEST, you can override them by specifying the corresponding operand with PRINTDS. For example, specify the following command:

```
PRINTDS DA(ABC) OUTDES(OUTPR1) NOBURST COPIES(1) DEST(NODEB.USR)
```

The COPIES, NOBURST, and DEST operands override the values specified on the output descriptor.

If you specified a default destination in the SYS1.UADS data set, the DEST output descriptor overrides the destination in SYS1.UADS.

PAGELEN(*lines*)
specifies the number of lines to be printed on a page. The lines value must be from 6 to 4095. The default value is 60. The PAGELEN value less the TMARGIN and BMARGIN must be greater than or equal to 6:

```
                                TMARGIN value
                                ▲
                                |
                                |
PAGELEN value must be greater   Must have 6 or more lines
than or equal to 6              |
                                |
                                |
                                ▼
                                BMARGIN value
```

Note: PAGELEN specifies the length of a printed page in terms of the number of lines per logical page. The specified value does not override the maximum lines per physical page that the printing program is using. However, if the value specified is greater than the maximum lines per physical page that the printing program is using, then any remainder from the specified value will be printed on the next physical page until the specified value is reached, which will end a physical page.

If you are printing a directory of a partitioned data set, the system uses the number of lines specified in PAGELEN for each page of the directory. It ignores the values specified for TMARGIN or BMARGIN. For more information about printing a directory of a partitioned data set, see the description for the DIRECTORY/MEMBERS/ALL operand.

TITLE | NOTITLE
specifies that a title, including the name of the data set is to be printed and the page number is to appear on every page of the printed output. NOTITLE specifies that the title is to be suppressed.

TITLE is the default for data sets with *no* carriage control characters. NOTITLE is the default for data sets with carriage control characters. If you specify the CCHAR, TRC, and DCF operands, the default is also NOTITLE.

You cannot specify NOTITLE with the DIRECTORY operand because directory title lines are always printed on directory pages. If you specify NOTITLE to print a partitioned data set with the ALL operand, no title lines appear when the system prints each member. However, the directory pages continue to be formatted with directory title lines to distinguish the directory from the members of the data set.

If you specify TITLE and the input data set contains carriage control characters, the system ignores TITLE and uses NOTITLE to print the data set. However, if

a list of input data sets is being printed, the system uses TITLE to print subsequent data sets that do not contain carriage control characters. For example, suppose the data set `SEPT87.REPORT` is a pre-formatted report that contains carriage control characters. The data set SEPT85.DATA does not contain carriage control characters. If you specify the following command:

```
PRINTDS DA('SEPT87.REPORT' 'SEPT85.DATA') TITLE
```

The system uses NOTITLE for the first data set because it assumes that any title information has already been added to the formatted data set. However, the system uses TITLE for the second data set.

TMARGIN(*lines*)
specifies the number of blank lines to be left at the top of each printed page. You can specify a minimum of 0 lines, and a maximum of 6 lines less than the value specified or defaulted for the PAGELEN operand.

TMARGIN(0) is the default. A non-zero TMARGIN value is mutually exclusive with the CCHAR or DIRECTORY operand.

TODATASET(*dsname*) | TODSNAME(*dsname*)
specifies the name of the data set into which the formatted input data is to be copied. If you specify TODATASET or TODSNAME, a SYSOUT data set is not created.

If the specified data set does not exist, PRINTDS creates the data set. Otherwise, PRINTDS uses the existing data set. If the specified output data set already exists, the output from the PRINTDS command replaces any existing data.

If you specify TODATASET that already exists and the data set is not large enough to hold all of the output, the system issues an error message to inform you to preallocate the data set with more space and to reissue the PRINTDS command.

TRC | NOTRC
specifies whether the data records contain table reference character (TRC) codes. The codes identify the font to be used to print each record. A TRC code immediately follows the carriage control character, if any. Its value corresponds to one of the four fonts specified by CHARS. If you specify TRC, the system assumes NOTITLE.

NOTRC specifies that the data set does not contain TRC codes. NOTRC is the default unless you specify CHARS or DCF. If you specify CHARS or DCF or use the default of DCF and the data set is not formatted for the 1403 printer, the system assumes TRC. On a 1403 printer, the system uses NOTRC.

If you specify COLUMNS, NUM, or SNUM operands with TRC, column 1 refers to the first character after the table reference character.

UCS(*universal_character_set_name*)
specifies the alphanumeric value for the universal character set name. Specify up to 4 characters. If you do not specify the CHARS operand, the system uses the UCS as the default.

WRITER(*external_writer_name*)
specifies a name for use in processing or selecting a SYSOUT data set. If you specify the external writer name, the output data set is written under the control of that external writer rather than the control of JES2 or JES3. The writer name can contain 1 to 8 alphabetic, numeric, or special characters #, $, or @.

For JES3, you can code the DEST=NODENAME parameter in the output descriptor with the WRITER=NAME parameter. However, do not code DEST=NODENAME.USERID in the output descriptor with WRITER=NAME, because WRITER=NAME will override the specification of DEST=NODENAME.USERID.

Default Values for PRINTDS

The following figure shows a summary of default values for the PRINTDS command. SYSOUT operand defaults apply only when printing to a SYSOUT data set.

Changing these default values for the PRINTDS command is discussed in *OS/390 TSO/E Customization*.

Figure 1-33. Summary of Default Values for the PRINTDS Command

Operand	SYSOUT only	Default Value	Allowed Values
BIND	No	0	0 - 255
TMARGIN	No	0	0 - 4094
BMARGIN	No	0	0 - 4094
PAGELEN	No	60	6 - 4095
CLASS or SYSOUT	Yes	A	A - Z, 0 - 9
BURST or NOBURST	Yes	NOBURST	BURST or NOBURST
COPIES	Yes	1	1 - 255
HOLD or NOHOLD	Yes	NOHOLD	HOLD or NOHOLD
MEMBERS or DIRECTORY or ALL	No	ALL	MEMBERS or DIRECTORY or ALL
NUM or SNUM or NONUM	No	NONUM	NUM or SNUM or NONUM
TITLE or NOTITLE	No	If possible, TITLE, Otherwise, NOTITLE. (See note below.)	TITLE or NOTITLE

Note: If you did not specify the CCHAR, DCF, or TRC operands and the data set does not contain carriage control characters, the default is TITLE. Otherwise, PRINTDS assumes NOTITLE. If NOTITLE is the default, PRINTDS does not print title lines when printing a sequential data set or members of a partitioned data set. However, the directory of the partitioned data set is always printed with title lines, even when you specify NOTITLE.

The destination value used for a SYSOUT data set can be defined by the following statements:

- PRINTDS DEST keyword
- OUTDES DEST keyword (or output JCL in a TSO/E proc)

  - OUTDES statement referenced is specified by the PRINTDS OUTDES keyword
  - Output JCL statements in a TSO/E proc could be used for a PRINTDS SYSOUT data set if output JCL is an applicable default type
- Default destination (as specified by ACCOUNT DEST keyword) for the user in SYS1.UADS
- For JES3 only, the SYSOUT initialization statement DEST keyword.

When JES processes the SYSOUT, it incorporates the information in the order listed below.

1. PRINTDS DEST keyword is used if it is given. If no PRINTDS DEST keyword is given, then check if the output statement is applicable. The OUTDES keyword on PRINTDS provides the OUTPUT statement.
2. DEST keyword in the OUTPUT statement is used if it is given. If no OUTPUT DEST keyword is given, then check if SYS1.UADS has a default destination defined (DEST keyword).
3. Default destination (DEST keyword) in SYS1.UADS is used if it is given. If there is no default destination (DEST keyword) in SYS1.UADS then check the SYSOUT CLASS for JES3 installation.
4. DEST keyword in SYSOUT CLASS is used for JES3 installation if the SYSOUT CLASS for the PRINTDS contains the DEST keyword.
5. If none of the above applied, use JES defaults.

Mutually Exclusive Operands on PRINTDS

The following table shows the mutually exclusive operands on the PRINTDS command:

Figure 1-34. Mutually Exclusive Operands on the PRINTDS Command

You cannot specify this operand	**with these operands:**
CCHAR	BMARGIN, DIRECTORY, PAGELEN, TITLE, TMARGIN
DCF	DIRECTORY, SINGLE or DOUBLE or TRIPLE, TITLE, TODATASET or TODSNAME
DIRECTORY	BIND, BMARGIN, CCHAR or SINGLE or DOUBLE or TRIPLE, COLUMNS, DCF or NODCF, FOLD or TRUNCATE, LINES, NUM or SNUM or NONUM, NOTITLE, TMARGIN
TRC	TITLE, TODATASET or TODSNAME
TODATASET or TODSNAME	BURST or NOBURST, CHARS, CLASS, COPIES, DCF or NODCF, DEST, FCB, FLASH, FORMS, HOLD or NOHOLD, MODIFY, OUTDES, TRC or NOTRC, UCS, WRITER
SNUM	COLUMNS

BMARGIN, TMARGIN, and BIND allow a minimum value of 0. Because specifying a value of 0 for any of these operands is the same as *not* specifying them, BMARGIN(0) and TMARGIN(0) are not considered to be mutually exclusive with CCHAR or DIRECTORY. Likewise, BIND(0) is not mutually exclusive with DIRECTORY. The system ignores the operands.

PRINTDS Command Return Codes

Figure 1-35. PRINTDS Command Return Codes

0	Processing successful.
4	Processing completed, but a warning message has been issued.
8	The input, output, or SYSOUT data set could not be used.
12	An error occurred during the processing of the PRINTDS command.
16	The installation exit requested termination of the PRINTDS command.

PRINTDS Command Examples

Example 1

Operation: Print all the members of a partitioned data set, but not the directory. Lines longer than 72 characters are to be folded onto more than one line.

Known:

- The name of the data set: JCL.CNTL

```
printds dsname(jcl.cntl) members fold(72)
```

Example 2

Operation: Send the first 250 lines of a sequential data set to a JES held output queue.

Known:

- The name of the data set: NAMES.TEXT

```
printds dataset(names.text) lines(1:250) hold
```

Example 3

Operation: Print a member of a partitioned data set using an output descriptor that is installation-defined.

Known:

- The name of the data set: FOIL.TEXT
- The name of the member: STATUS
- The name of the output descriptor: FOILOUT

```
printds da(foil.text(status)) outdes(foilout)
```

Example 4

Operation: Print a member of a partitioned data set that is also a Document Composition Facility file using the fonts GT10 and GB10.

Known:

- The name of the data set: MEMO.TEXT
- The name of the member: NOTICE
- The first line in the member reads: SCRIPT/VS R2.0: DEVICE 3800N6 CHARS GT10 GB10

```
printds ds(memo.text(notice))
```

Example 5

Operation: Print a member of a partitioned data set that is also a Document Composition Facility file using the character arrangement tables GT12 and GT15.

Known:

- The name of the data set: DOCUMENT.TEXT
- The name of the member: APPROVAL
- The first line in the member reads: `SCRIPT/VS R2.0: DEVICE 3800N6 CHARS ST10 ST12`

```
printds da(document.text(approval)) chars(gt12,gt15)
```

In the above example, the fonts GT12 and GT15 for the CHARS operand override the DCF font names ST10 and ST12.

Example 6

Operation: Print the data sets concatenated to a file.

Known:

- The name of the file: SYSPROC

```
printds fi(sysproc)
```

The members of each of the three partitioned data sets are printed followed by the data set directory. By using the FILE operand, you do not have to know the names of the data sets. The system prints them as if you had specified something like the following:

```
printds da('sys1.tso.clist','tools.clist','my.clist')
```

PROFILE Command

Use the PROFILE command or the PROFILE subcommand of EDIT to establish, change, or list your user profile. The information in your profile tells the system how you want to use your terminal. You can:

- Define a character-deletion or line-deletion control character (on some terminals)
- Specify whether prompting is to occur
- Specify the frequency of prompting under the EDIT command
- Specify whether you want to accept messages from other terminal users
- Specify whether you want the opportunity to obtain additional information about messages from a CLIST
- Specify whether you want message numbers for diagnostic messages displayed at your terminal
- Specify primary and secondary languages to be used in displaying translated information.

The syntax and function of the PROFILE subcommand of EDIT is the same as that of the PROFILE command.

Initially, a user profile is prepared for you when arrangements are made for you to use the system. The authorized system programmer creates your user ID and your user profile. The system programmer is restricted to defining the same user profile for every user ID that the programmer creates. This typical user profile is defined when a user profile table (UPT) is initialized to hexadecimal zeroes for any new user ID. Thus, your initial user profile is made up of the default values of the operands discussed under this command. The system defaults, shown in Figure 1-36, provide for the character-delete and the line-delete control characters, depending upon what type of terminal is involved:

Figure 1-36. System Defaults for Control Characters

TSO/E Terminal	Character-Delete Control Character	Line-Delete Control Character
IBM 2741 Communication Terminal	BS (backspace)	ATTN (attention)
IBM 3270 Information Display System	None	None
IBM 3290 Information Panel	None	None
IBM 3767 Communication Terminal	None	None
IBM 3770 Data Communication System	None	None

If deletion characters, prompting, and message activity are not what you expect, check your profile by displaying it with the LIST operand.

Change your profile by using the PROFILE command with the appropriate operands. Only the characteristics that you specify explicitly by operands are changed. Other characteristics remain unchanged. The new characteristics remain valid from session to session. If PROFILE changes do not remain from session to session, your installation might have a LOGON pre-prompt exit that is preventing the saving of any changes in the UPT. Verify this with your system programmer.

If no operands are entered on the PROFILE command, the current user profile is displayed.

PROFILE Command Syntax

```
►►─┬─PROFILE─┬─┬─RECOVER───┬─┬─CHAR(─┬─character─┬─)─┬──────────────►
   └─PROF────┘ └─NORECOVER─┘ │       └─BS───────┘   │
                             └─NOCHAR────────────────┘

►─┬─LINE(─┬─ATTN──────┬─)─┬─PROMPT───┬─┬─INTERCOM───┬──────────────►
  │       │─character─┤   │─NOPROMPT─┘ └─NOINTERCOM─┘
  │       └─CTLX──────┘   │
  └─NOLINE────────────────┘

►─┬─PAUSE───┬─┬─MSGID───┬─┬─MODE───┬─┬─LIST─┬──────────────────────►
  └─NOPAUSE─┘ └─NOMSGID─┘ └─NOMODE─┘ └──────┘

►─┬─PREFIX(dsname_prefix)─┬─┬─WTPMSG───┬─┬─PLANGUAGE(language)─┬──►
  └─NOPREFIX────────────┘ └─NOWTPMSG─┘ └────────────────────┘

►─┬─SLANGUAGE(language)─┬──────────────────────────────────────►◄
  └─────────────────────┘
```

PROFILE Command Operands

RECOVER | NORECOVER

RECOVER specifies that you can use the recover option of the EDIT command.

NORECOVER specifies that you cannot use the recover option of the EDIT command. This is the default value for your profile when the profile is created.

CHAR(*character* | BS) | NOCHAR

CHAR(*character*) [5] specifies the EBCDIC character that you want to use to tell the system to delete the previous character entered. You should not specify a blank, tab, comma, asterisk, or parentheses because these characters are used to enter commands. You should not specify terminal-dependent characters, which do not translate to a valid EBCDIC character.

If you are running under Session Manager, the system ignores the EBCDIC character.

Note: Do not use an alphabetic character as either a character-delete or a line-delete character. If you do, you run the risk of not being able to enter certain commands without accidentally deleting characters or lines of data. For instance, if you specify R as a character-delete character, each time you try to enter a PROFILE command the R in PROFILE would delete the P that precedes it. Thus it would be impossible to enter the PROFILE command as long as R is the character-delete control character.

CHAR(BS) [5] specifies a backspace signals that the previous character entered should be deleted. This is the default value when your user profile is created.

NOCHAR [5] specifies no control character is to be used for character deletion.

LINE(ATTN | *character* | CTLX) | NOLINE

LINE(ATTN) [5] specifies an attention interruption is to be interpreted as a line-deletion control character. This is the default value when your user profile is created.

Note: If a not valid character- and/or line-delete control character is entered on the PROFILE command, an error message informs you of which specific control character is not valid. The character or line delete field in the user profile table is not changed. You can continue to use the old character- or line-delete control characters.

LINE(*character*) [5] specifies a control character that you want to use to tell the system to delete the current line. If you are running under Session Manager, the system ignores the control character.

---

[5] Not supported with terminals that use VTAM.

LINE(CTLX) [5] specifies the X and CCTRL keys (pressed together) on a Teletype terminal are to be interpreted as a line-deletion control character. If you are operating a Teletype terminal, LINE is the default value when your user profile is created.

NOLINE [5] specifies no line-deletion control character (including ATTN) is recognized.

PROMPT | NOPROMPT

PROMPT specifies that you want the system to prompt you for missing information. This is the default value when your user profile is created.

NOPROMPT specifies no prompting is to occur.

INTERCOM | NOINTERCOM

INTERCOM specifies that you can receive messages from other terminal users. This is the default value when your user profile is created.

NOINTERCOM specifies that you do not want to receive messages from other users.

PAUSE | NOPAUSE

PAUSE specifies that you want the opportunity to obtain additional information when a message is issued at your terminal while a CLIST (see the EXEC command) or an in-storage command list (created by using the STACK macro) is executing. After a message that has additional levels of information is issued, the system displays the word PAUSE and waits for you to enter a question mark (?) or press the Enter key.

NOPAUSE specifies that you do not want to be prompted for a question mark or Enter. This is the default value when your user profile is created.

MSGID | NOMSGID

MSGID specifies diagnostic messages are to include message identifiers.

NOMSGID specifies diagnostic messages are not to include message identifiers. This is the default value when your user profile is created.

MODE | NOMODE

MODE specifies a mode message is requested at the completion of each subcommand of EDIT.

NOMODE specifies, when this mode is in effect, the mode message (E or EDIT) is to be issued after a SAVE, RENUM, or RUN subcommand is issued and also when changing from input to edit mode. Specifying PROFILE NOMODE eliminates some of the edit mode messages. NOMODE has the same effect in the background as it does in the foreground. Your profile can be changed by using the PROFILE command with the appropriate operands. Only those characteristics specifically

denoted by the operands specified are changed. All other characteristics remain unchanged.

LIST
specifies the characteristics of the terminal user's profile be listed at the terminal. If other operands are entered with LIST, the characteristics of the user's profile are changed first, and then the new profile is listed.

After a new user ID is created and before the character-delete and/or line-delete control character is changed, entering PROFILE LIST results in CHAR(0) and LINE(0) being listed. This indicates the terminal defaults for character-delete and line-delete control characters are used.

Although you receive RECOVER/NORECOVER as an option for this operand, you must be authorized to use the RECOVER options.

PREFIX(*dsname_prefix*) | NOPREFIX

PREFIX(*dsname_prefix*) specifies a prefix that is to be appended to all non-fully-qualified data set names. The prefix is composed of 1 to 7 alphanumeric characters and begins with an alphabetic character or one of the special characters #, $, or @.

NOPREFIX specifies no prefixing of data set names by any qualifier is to be performed.

Note: For background processing, the default is the user ID.

WTPMSG | NOWTPMSG

WTPMSG specifies that you want to receive all write-to-programmer messages at your terminal.

NOWTPMSG specifies that you do not want to receive write-to-programmer messages. This is the default value when your user profile is created.

PLANGUAGE(*language*)
specifies the primary language to be used in displaying translated information (messages, help information, and the TRANSMIT full-screen panel). You can specify either a 3-character language code or a symbolic language name defined by your installation. If the language name contains one or more blanks, you must enclose the name in quotes. See your system administrator for a list of valid language codes and installation-defined language names.

SLANGUAGE(*language*)
specifies the secondary language to be used in displaying translated information should the primary language fail. You can specify either a 3-character language code or a symbolic language name defined by your installation. If the language name contains one or more blanks, you must enclose the name in quotes. See your system administrator for a list of valid language codes and installation-defined language names.

PROFILE Language Setting Notes

If you change your language and then log off, the new language specified may not be saved from session to session. This depends on how your installation defines languages. See your system administrator for assistance.

PROFILE Foreground/Background Processing Differences

The following differences should be noted for foreground/background processing:

- Changes made while processing in the foreground are saved from session to session.
- Changes made while processing in the background remain in effect for the duration of the background session, and are not saved after the background session. Your foreground profile is not altered by background processing.

See Figure 1-37 for a guide to the initialization of the terminal monitor program (TMP) in batch processing. The heading “RACF/Non-RACF Job Without User ID” means RACF without user ID, without a UADS entry for the user ID, or without RACF.

Figure 1-37. UPT/PSCB Initialization Table in the Background

TMP Initialization in the Background					
User Profile Table (UPT)			**Protected Step Control Block (PSCB)**		
	RACF Job With USER ID	**RACF/Non-RACF Job Without USER ID**		**RACF Job With USER ID**	**RACF/Non-RACF Job Without USER ID**
USERFLD	*	ZERO	PSCBUSER	job user ID	NULL (blanks) (1) NO JCL
EDIT RECOV	*$	NO RECOVER	PSCBGPNM	NULL	NULL (blanks)
PROMPT	*$	NO PROMPT	OPERATOR	*	NOOPER
MSGID	*	MSGID	ACCOUNT	*	ACCOUNT (1) NO ACCOUNT
INTERCOM	*	NO INTERCOM	JCL	*	JCL
PAUSE	*	NO PAUSE	MOUNT	*	NO MOUNT
ATTN/LD	*	NOT ATTN	ATTN/LD	*	NOT ATTN
MODEMSG	*	NO MODEMSG	EDIT RECOV	*	NO RECOVER
WTPMSG	*	NO WTPMSG	HOLDCLASS	*	NULL (zero)
CHAR DEL	*$	ZERO	SUBMIT CLASS	*	NULL (zero)
LINE DEL	*$	ZERO	SUBMIT MSGCLASS	*	NULL (zero)
PREFIX	1 * 2 job user ID	NULL (blanks) (1) ***	SYSOUT CLASS	*	NULL (zero)
PLANGUAGE	**	** (1) ENU (English)	SYSOUT DEST	*	NULL (blanks)
SLANGUAGE	**	** (1) ENU (English)	CHAR DEL	*	NULL (zero)
			LINE DEL	*	NULL (zero)
			REGION SIZE	*/2	NULL (zero)

* The value is taken from UADS entry profile. If the UADS prefix is empty, the system uses the job user ID.

*$ You can modify most of the above defaults in the background by issuing the PROFILE command with the appropriate operand/keyword. You cannot use the PROFILE command to modify the attributes in the background.

** This depends on how your installation defines languages.

*** The value is set equal to the userid associated with this address space unless that userid is greater than seven characters in length. In that case, there is no prefix. The search order for the userid is ACEEUSRI, ASXBUSER, no prefix.

* The value is taken from the UADS entry profile.

(1) Setting as a result of using TSO/E Environment Service (IKJTSOEV)

PROFILE Command Return Codes

Figure 1-38. PROFILE Command Return Codes

0	Processing successful.
12	Processing unsuccessful. An error message has been issued.

PROFILE Command Examples

Example 1

Operation: Establish a complete user profile.

Known:

- The character that you want to use to tell the system to delete the previous character: #
- The indicator that you want to use to tell the system to delete the current line: ATTN.
- You want to be prompted.
- You do not want to receive messages from other terminals.
- You want to be able to get second-level messages while a CLIST is executing.
- You do not want diagnostic message identifiers.

```
profile char(#) line(attn) prompt nointercom pause
nomsgid
```

Example 2

Operation: Suppose that you have established the user profile in Example 1. The terminal that you are using now does not have a key to cause an attention interrupt. You want to change the line-delete control character from ATTN to @ without changing any other characteristics.

```
profile line(@)
```

Example 3

Operation: Establish and use a line-deletion character and a character-deletion character.

Known:

- The line-deletion character: &
- The character-deletion character: !

```
profile line(&) char(!)
```

If you type:

```
now is the tiâ!bcg!;
```

and press the Enter key, you actually enter:

```
abc.
```

Example 4

Operation: Suppose that you want to receive TSO/E information in Japanese instead of U.S. English.

Known:

- The installation-defined name for Japanese: JAPAN

```
profile planguage(japan)
```

Note: The Japanese language must be active on your system for this command to work.

Example 5

Operation: Suppose that you want to receive TSO/E information in French should the primary language fail.

Known:

- The 3-character language code for French: FRA

```
profile slanguage(fra)
```

Note: The French language must be active on your system for this command to work.

PROTECT Command

Use the PROTECT command to prevent unauthorized access to your non-VSAM data set. Use the Access Method Services ALTER and DEFINE commands to protect your VSAM data set. These commands are described in *DFSMS/MVS Access Method Services for VSAM*.

The PROTECT command establishes or changes:

- The passwords that must be specified to gain access to your data
- The type of access allowed.

Data sets that have been allocated (either during a LOGON procedure or by the ALLOCATE command) cannot be protected by specifying the PROTECT command. To password protect an allocated data set, you would deallocate it first using the FREE command and then protect it using the PROTECT command.

Note that the PROTECT command does not support dynamic unit control blocks (dynamic UCBs). If the device that holds the data set to be protected has been dynamically reconfigured in your system, you will receive a message explaining that the required volume is not mounted. Instead of using the PROTECT command to control data set access the use of RACF should be considered.

PROTECT Command Syntax

```
►►─┬─PROTECT─┬─data_set_name/control_password──────────────────────►
   └─PROT────┘

   ┌─ADD(password_2)──────────────┐
►──┼──────────────────────────────┼──┬─────────┬──┬──────────┬──────►
   ├─REPLACE(password_1,password_2)─┤  ├─PWREAD─┤  ├─PWWRITE─┤
   ├─DELETE(password_1)─────────────┤  └─NOPWREAD┘  └─NOWRITE─┘
   └─LIST(password_1)───────────────┘

►──┬──────────────────────────────────────────────────────────────►◄
   └─DATA('string')─┘
```

PROTECT Command Operands

data_set_name
specifies the name of the data set you want to protect. If the data set is not cataloged, you must specify the fully-qualified name. For example:

```
protect 'userid.dsn.qual' list(password)
```

control_password
Required on all operands except the LIST operand. It provides the control for authorized personnel to alter the password structure on the PROTECT command. See “Password Data Set” on page 1-259 for additional information.

ADD | REPLACE | DELETE | LIST

ADD(*password_2***)** specifies a new password is to be required for access to the named data set. ADD is the default.

If the data set exists and is not already protected by a password, its security counter is set and the assigned password is flagged as the control password for the data set. The security counter is not affected when additional passwords are entered.

REPLACE(*password_1***,** *password_2***)** specifies that you want to replace an existing password, access type, or optional security information. The first value (password_1) is the existing password; the second value (password_2) is the new password.

DELETE(*password_1***)** specifies that you want to delete an existing password, access type, or optional security information.

If the entry being removed is the control password (see the discussion following these operand descriptions), all other entries for the data set are also removed.

LIST(*password_1***)** specifies that you want the security counter, the access type, and any optional security information in the password data set entry to be displayed at your terminal.

password_1 specifies the existing password that you want to replace, delete, or have its security information listed.

password_2 specifies the new password that you want to add or to replace an existing password.

PWREAD | NOPWREAD

PWREAD specifies the password must be given before the data set can be read.

NOPWREAD specifies the data set can be read without using a password.

PWWRITE | NOWRITE

PWWRITE specifies the password must be given before the data set can be written to.

NOWRITE specifies the data set cannot be written to.

DATA('*string*')
specifies optional security information to be retained in the system. The value that you supply for string specifies the optional security information that is to be included in the password data set entry (up to 77 bytes).

Passwords

You can assign one or more passwords to a data set. When assigned, the password for a data set must be specified to access the data set. A password consists of 1 to 8 alphanumeric characters. You are allowed two attempts to supply a correct password.

Types of Access

Four operands determine the type of access allowed for your data set: PWREAD, PWWRITE, NOPWREAD, NOWRITE.

Each operand, when used alone, defaults to one of the preceding types of access. The default values for each operand used alone are:

OPERAND	DEFAULT VALUE	
PWREAD	PWREAD	PWWRITE
NOPWREAD	NOPWREAD	PWWRITE
PWWRITE	NOPWREAD	PWWRITE
NOWRITE	PWREAD	NOWRITE

A combination of NOPWREAD and NOWRITE is not supported and defaults to NOPWREAD and PWWRITE.

If you specify a password, but do not specify a type of access, the default is:

- NOPWREAD PWWRITE, if the data set does not have any existing access restrictions
- The existing type of access, if a type of access has already been established

When you specify the REPLACE function of the PROTECT command, the default type of access is that of the entry being replaced.

Password Data Set

Before you can use the PROTECT command, a password data set must reside on the system residence volume. The password data set contains passwords and security information for protected data sets. You can use the PROTECT command to display this information about your data sets at your terminal.

The password data set contains a security counter for each protected data set. This counter keeps a record of the number of times an entry has been referred to. The counter is set to zero at the time an entry is placed into the data set, and is increased each time the entry is accessed.

Each password is stored as part of an entry in the password data set. The first entry in the password data set for each protected data set is called the *control entry*. The password from the control entry must be specified for each access of the data set by using the PROTECT command. However, the LIST operand of the PROTECT command does not require the password from the control entry.

If you omit a required password when using the PROTECT command, the system prompts you for it. If your terminal is equipped with the print-inhibit feature, the system disengages the printing mechanism at your terminal while you enter the password in response. However, the print-inhibit feature is not used if the prompting is for a new password.

PROTECT Command Return Codes

Figure 1-39. PROTECT Command Return Codes

0	Processing successful.
12	Processing unsuccessful. An error message has been issued.

PROTECT Command Examples

Example 1

Operation: Establish a password for a new data set.

Known:

- The name of the data set: ROBID.SALES.DATA
- The password: L82GRIFN
- The type of access allowed: PWREAD PWWRITE
- The logon id was: ROBID

```
protect sales.data pwread add(l82grifn)
```

Example 2

Operation: Replace an existing password without changing the existing access type.

Known:

- The name of the data set: ROBID.NETSALES.DATA
- The existing password: MTG@AOP
- The new password: PAO$TMG
- The control password: ELHAVJ
- The logon id was: ROBID

```
prot netsales.data/elhavj replace(mtg@aop,pao$tmg)
```

Example 3

Operation: Delete one of several passwords.

Known:

- The name of the data set: ROBID.NETGROSS.ASM
- The password: LETGO
- The control password: APPLE
- The logon id was: ROBID

```
prot netgross.asm/apple delete(letgo)
```

Example 4

Operation: Obtain a listing of the security information for a protected data set.

Known:

- The name of the data set: ROBID.BILLS.CNTRLA
- The password required: D#JPJAM

```
protect 'robid.bills.cntrla' list(d#jpjam)
```

Example 5

Operation: Change the type of access allowed for a data set.

Known:

- The name of the data set: ROBID.PROJCTN.LOAD
- The new type of access: NOPWREAD PWWRITE
- The existing password: DDAY6/6
- The control password: EEYORE
- The logon id was: ROBID

```
protect projctn.load/eeyore replace(dday6/6)-
nopwread pwwrite
```

RECEIVE Command

Use the RECEIVE command to retrieve transmitted files and to restore them to their original format.

RECEIVE Command Syntax

```
►►─RECEIVE──┬──────────────────┬──┬──┬─INDDNAME─┬─(ddname)─┬──►
            └─USERID(user_id)──┘  │  │  └─INFILE──┘          │
                                  │  └─INDSNAME─┬─(dsname)─┘
                                  │    └─INDATASET─┘
►──┬──────────────────────────┬──┬──┬─LOGDATASET─┬─(dsn)─┬──►
  └─PARM(parameter_string)───┘  │  └─LOGDSNAME───┘       │
                                │
  ┌─DISPLAY────┐  ┌─NAMES────┐
►─┤            ├──┤          ├──────────────────────────────►◄
  └─NODISPLAY──┘  └─NONAMES──┘
```

RECEIVE Command Operands

USERID(*user_id*)
allows you to receive data for a user ID other than your own. The USERID operand is limited to users with OPERATOR authority and to those who are authorized through the RECEIVE initialization exit (INMRZ01). The user ID might exist in SYS1.UADS at the target node or might be a non-existent user ID.

INDDNAME(*ddname*) | INFILE(*ddname*)
specifies the use of a preallocated file as the input data set to receive the transmitted data. Define the data set with RECFM=F, FB, V, VB, or U. For F and FB, LRECL=80. The remaining DCB attributes are installation dependent.

Specify the data set as either sequential or partitioned, but it must be the same as that specified for OUTDDNAME or OUTFILE of the TRANSMIT command. INDDNAME and INFILE are primarily intended for system programmer use.

INDSNAME(*dsname*) | INDATASET(*dsname*)
specifies the use of a sequential data set as the input data set to receive the transmitted data. Define the data set with RECFM=F, FB, V, VB, or U. For F and FB, LRECL=80. The remaining DCB attributes are installation dependent.

If you specify INDATASET with RECEIVE, the transmitted data is not logged and no acknowledgment is sent to the originator. If you do not specify INDATASET, the transmitted data is logged into the log entry and an acknowledgment is sent to the originator.

Use INDSNAME and INDATASET in combination with OUTDSNAME and OUTDATASET operands of the TRANSMIT command. INDSNAME and INDATASET are primarily intended for system programmer use.

PARM(*parameter_string*)
You can be instructed by your installation to use this operand to specify installation dependent data.

LOGDATASET(*dsname*) | LOGDSNAME(*dsname*)
specifies an alternate name of a sequential data set used to log the transmitted data. RECEIVE checks if the data set, specified by the LOGDATASET/LOGDSNAME operand, is a sequential data set. However, RECEIVE does not check whether the data set attributes are RECFM=VB, LRECL=255, and BLKSIZE=3120. If the data set does not exist, the system creates it.

If you specify NONAMES with LOGDATASET or LOGDSNAME, the system does not search the NAMES data set.

DISPLAY | NODISPLAY

DISPLAY specifies that the transmitted data or message is to be displayed at the terminal. The system normally displays the data or messages that are transmitted using one of the following operands of the TRANSMIT command:

- MSGDATASET or MSGDSNAME
- MSGDDNAME or MSGFILE
- MESSAGE or MSG
- TERMINAL

The system places the data or message in the log data set. DISPLAY is the default.

NODISPLAY specifies that the transmitted data or message is not to be displayed at the terminal. The system normally displays the data or messages that are transmitted using one of the following operands of the TRANSMIT command:

- MSGDATASET or MSGDSNAME
- MSGDDNAME or MSGFILE
- MESSAGE or MSG
- TERMINAL

The system places the data or message in the log data set.

NAMES | NONAMES

NAMES specifies that RECEIVE search and resolve the NAMES data set for a matching node and user ID of the user who transmitted the data or message. If the nickname and name of the user are found, RECEIVE places the nickname, name, user ID, and node into the log data set.

If the nickname and name are not found, RECEIVE places only the user ID and node into the log data set. All other NAMES data set processing remains the same. For more information about the NAMES data set, see “NAMES Data Set Function” on page 1-371 under the TRANSMIT command. NAMES is the default.

NONAMES specifies that the nickname and name of the user who transmitted the data or message are not to be resolved. RECEIVE places only the node and user ID in the log data set. All other NAMES data set processing remain the same. For more information about the NAMES data set, see “NAMES Data Set Function” on page 1-371 under the TRANSMIT command.

If you specify NONAMES with LOGDATASET or LOGDSNAME, the system does not process the NAMES data set.

RECEIVE Command Prompt Parameters

After describing each file, the RECEIVE command *prompts* for overriding parameters. These parameters are all optional and control the restoring of the data set. Parameters not specified are allowed to default or are taken from information transmitted with the data. The optional parameters are shown below.

RECEIVE Command Prompt Parameter Syntax

```
►►─┬─┬─DATASET─┬─(dsn)─┬─┬─UNIT(unit_name)─┬─┬─VOLUME(volser)─┬──►
   │ └─DSNAME──┘       │ │                 │ │                │
   │                   │ │                 │ │                │
   │                   │ │                 │ │                │
►──┬─SPACE(primary──────────────────────)─┬─┬─TRACKS──────────┬─┬─RELEASE─┬──►
   │                 └─,secondary─┘       │ │                 │ │         │
   │                                      │ │                 │ │         │
   │                                      │ │                 │ │         │
   │                                      │ │                 │ │         │
►──┬─DIRECTORY(blocks)─┬─┬─BLKSIZE(size)─┬─┬─NEW─┬──────────────────────────►
   │                   │ │               │ │     │
   │                   │ │               │ │     │
   │                   │ │               │ │     │
   │                   │ │               │ │     │
►──┬─PARM(parameter_string)─┬─┬─SYSOUT(──*──────────────)─┬──────────────────►
   │                        │ │        └─sysout_class─┘   │
   │                        │ │                           │
   │                        │ │                           │
   │                        │ │                           │
►──┬─NOPREVIEW─┬─┬─RESTORE─────────┬─┬─COPY─┬──────────────────────────────►
   │           │ │                 │ │      │
   │           │ │                 │ │      │
   │           │ │                 │ │      │
   │           │ │                 │ │      │
►──┬─MGMTCLAS(management_class_name)─┬──────────────────────────────────────►
   │                                 │
   │                                 │
   │                                 │
   │                                 │
►──┬─STORCLAS(storage_class_name)─┬──────────────────────────────────────►◄
   │                              │
   │                              │
   │                              │
   │                              │
```

RECEIVE Command Prompt Parameters

Default values for other keywords are specified with the keyword below.

DATASET(*dsname***)|DSNAME(***dsname***)**
specifies the name of the data set to be used to contain the received data set. If it does not exist already, the system creates it.

If DATASET and DSNAME are omitted, then RECEIVE uses the name of the transmitted data set, with the high-level qualifier changed to the user ID of the receiving user. If this data set already exists, is a sequential data set, and disposition (SHR/MOD/OLD/NEW) was not specified, RECEIVE prompts you for permission to overwrite the data set. If the data set is partitioned, you are prompted to replace duplicate members.

UNIT(*unit_name***)**
specifies a unit name for a new output data set. The default value for UNIT is your normal TSO/E unit name.

VOLUME(*volser***)**
specifies a specific volume serial number for a new output data set. The default value for VOLUME is no value, allowing the system to select a volume from those defined by your unit name specified on the UNIT keyword.

SPACE(*primary***,***secondary***)**
specifies primary and secondary space for the received data set. The default value for SPACE is a primary size equal to the size of the incoming data and a secondary size of approximately 25 percent of the primary. If the disposition MOD is used, and the data set is not yet allocated, the system defaults are used to obtain the SPACE parameter defaults.

TRACKS
specifies space to be allocated in tracks. TRACKS is the default when SPACE is specified.

CYLINDERS
specifies space to be allocated in cylinders.

BLOCKS(*size*)
specifies space to be allocated in blocks of the specified size. BLOCKS is the default when SPACE is not specified.

RELEASE
specifies unused space to be released when the receive operation is complete.

DIRECTORY(*blocks*)
specifies an override for the number of directory blocks in a partitioned data set. The default value for DIRECTORY is the number of directory blocks required for the received members.

If a sequential data set is being received into a new PDS by specifying DA(X(MEM)) and DIRECTORY is not specified, the default value for directory blocks is 27.

BLKSIZE(*size*)
specifies a value for the block size of the output data set. This value is used, if it does not conflict with the received data set parameters or device characteristics.

NEW | OLD | MOD | SHR
specifies the data set disposition. If you do not specify one of the disposition keywords and the SPACE value is not present, RECEIVE first tries disposition OLD and attempts to allocate an existing data set. If this fails, disposition NEW is used, space values are added, and another attempt is made at allocation.

PARM(*parameter string*)
Your installation may instruct you to use this operand to specify installation dependent data.

SYSOUT(*sysout_class* | *)
specifies a SYSOUT class to be used for messages from utility programs the RECEIVE command invokes (such as IEBCOPY). If * is specified, these messages are directed to the terminal. The default for SYSOUT is normally *, but this might be changed by the installation.

PREVIEW | <u>NOPREVIEW</u>

PREVIEW specifies the received data should be displayed at the terminal as it is stored. This is generally appropriate only for sequential data sets because what is displayed is the result of the first pass at restoring the data. For partitioned data sets, the IEBCOPY unloaded format is displayed.

<u>NOPREVIEW</u> specifies no previewing is to be done. NOPREVIEW is the default.

<u>RESTORE</u> | RESTORE(LOG) | DELETE | END

RESTORE specifies the transmitted data should be restored to its original format. RESTORE is the default.

RESTORE(LOG) specifies the transmitted data should be restored to its original format and written to the appropriate log. It is also previewed to the terminal, but it is not written to another data set. You cannot specify RESTORE(LOG) with the DATASET or DSNAME operand. You would use RESTORE(LOG) primarily to RECEIVE a message and log the message text in the log entry.

DELETE specifies the file be deleted without restoring it.

END specifies the RECEIVE command terminate immediately, leaving the current data set on the spool to be reprocessed at a later time.

COPY
specifies not to restore the transmitted data to its original format, but copy it 'as is'. At a later time you can specify RECEIVE INDATASET to restore the data. COPY allows you to examine the data in its transmitted form so that you can debug problems when RECEIVE cannot process the transmitted data. It is primarily intended for system programmer use.

MGMTCLAS(*management_class_name***)**
With Storage Management Subsystem (meaning Storage Management Subsystem is installed and is active), specifies the name, 1 to 8 characters, of the management class for a new data set. When possible, do not specify MGMTCLAS. Instead, use the default your storage administrator provides through the automatic class selection (ACS) routines.

After the data set is allocated, attributes in the management class control the following:

- The migration of the data set, which includes migration from primary storage to Data Facility Hierarchical Storage Manager (DFHSM) owned storage to archival storage.
- The backup of the data set, which includes frequency of backup, number of versions, and retention criteria for backup versions.

Note: Without Storage Management Subsystem, the system syntax checks and then ignores the MGMTCLAS operand.

STORCLAS(*storage_class_name***)**
with Storage Management Subsystem, specifies the name, 1 to 8 characters, of the storage class. When possible, do not specify STORCLAS. Instead, use the default your storage administrator provides through the automatic class selection (ACS) routines.

The storage class replaces the storage attributes that are specified on the UNIT and VOLUME operand for non-Storage Management Subsystem managed data sets.

A "Storage Management Subsystem-managed data set" is defined as a data set that has a storage class assigned. A storage class is assigned when you specify STORCLAS or an installation-written ACS routine selects a storage class for the new data set.

Note: Without Storage Management Subsystem, the system syntax checks and then ignores the STORCLAS operand.

RECEIVE Command Return Codes

Figure 1-40. RECEIVE Command Return Codes

0	Processing successful.
4	Processing successful, but a warning message has been issued.
8	Processing incomplete. Some function failed.
12	Processing ends, but is not successful.
16	Processing abnormally terminates.

Receiving Data

The RECEIVE command picks the first file that has been transmitted to you, displays descriptive information about the file, and prompts you for information to control the restore operation. You can choose to accept the default data set name (the original data set name with the high-level qualifier changed to the receiving user's TSO/E prefix) and space information or you can override any of these defaults. RECEIVE creates the data set if it does not exist. You can specify a disposition (OLD, SHR, MOD, or NEW) to force a particular mode of operation. If the data set is successfully restored, RECEIVE continues with the next file. If requested by the sender, RECEIVE generates a notification of receipt and transmits it back to the sender. This return message contains routing and origin information, the name of the data set transmitted, the original transmission sequence number, and an indication of whether the receive was successful. If an error occurred, the message number of the error is included.

You can also use RECEIVE to retrieve Office Vision notes. However, an acknowledgment is not transmitted to the sender of the Office Vision note. Receipt notification is the default for any addressee entered individually on the TRANSMIT command, but not for addressees derived from distribution lists. If you want to be notified for addressees on distribution lists, you must specify :NOTIFY on the distribution list in the control data set or specify NOTIFY(ALL) on the TRANSMIT command.

You can use the RECEIVE command to receive network data (data that was not sent by the TRANSMIT command). The default LRECL for network data is 251 bytes. If you need to receive network data with an LRECL greater than 251 bytes, you must use a data set with an LRECL greater than 251 bytes.

Data Set Organization

Generally, RECEIVE cannot reformat data sets. The data set into which received data is to be written must have the same record format as the original data set. The record length must be compatible. That is, equal for fixed-length records and equal or longer for variable-length records. The block size of the received data set can be any value that is compatible with the record length and record format. If a mismatch is found in record length, block size, or record format, RECEIVE terminates with appropriate error messages and return codes.

You can receive sequential or partitioned data sets with record formats of F, FS, FB, FBS, V, VB, and U. The largest fixed-length record data set TSO/E can receive from VM is 32,760. Data sets with machine and ASA print-control characters are also supported. RECEIVE does not support data sets with keys, ISAM data sets, VSAM data sets, or data sets with user labels.

Receiving PDSE Data Sets

RECEIVE supports PDSE Data Libraries and PDSE Program Libraries. Depending on the user's specifications and on the level of MVS/DFP or DFSMS, conversion between PDSEs and PDSs, and PDSs and PDSEs, are performed implicitly. Program Objects which are executable programs stored as members of a PDSE Program Library, are subject to some restrictions when conversions to other data set types are attempted. When executing the TRANSMIT and RECEIVE commands, these restrictions prevent invalid Program Objects from being accepted.

When a PDS or PDSE is sent with the TRANSMIT command, the IEBCOPY utility first copies the data set to an intermediate sequential file. Control information is added and the data set is sent. When it is received, the control information is used to determine the characteristics of the original data set so that a new data set can be allocated with the proper size and of the same type. IEBCOPY is then used to reload the PDS or PDSE. Since there are restrictions when receiving Program Objects, the receiving terminal user gets assistance by means of a message about the data set characteristics of the incoming file. The user is then asked to enter the restore parameters.

The figure below shows all combinations of source and target data sets and how they are handled by TRANSMIT and RECEIVE.

Figure 1-41. Combinations of Source and Target Data Sets

	TARGET						
	Output data set	**Output data set**	**Output data set**	**Output data set**	**No output data set specified**		
SOURCE	Sequential File	PDS	Data Library	Program Library	PDSE is fully supported	Only Data Library is supported	PDSE is not supported
Sequential File	Sequential File	PDS member	Data Library member	INMR155I	Sequential File	Sequential File	Sequential File
PDS	Sequential File *	PDS	Data Library	INMR156I	PDS	PDS	PDS
Data Library	Sequential File *	PDS	Data Library	INMR157I	Data Library	Data Library	PDS
Program Library	INMR158I	INMR158I	INMR158I	Program Library	Program Library	INMR159I	INMR159I

* PDS member or Data Library member was transmitted with the SEQ option.

INMR15xI is the error message number resulting from the user request.

Receiving Protected Data Sets

RECEIVE warns you if you are receiving a data set that was RACF or PASSWORD protected. It takes no further action to protect newly restored data. If you are using the automatic data set protection feature of RACF, then the data set is protected. Otherwise, you should use the PROTECT command or the RACF ADDSD command to protect the data.

Receiving Enciphered Data

If RECEIVE detects that TRANSMIT enciphered the incoming file, it automatically attempts to decipher the data. To do this, it prompts you for decipher options and then passes these to the Access Method Services REPRO command. See “Data Encryption Function of TRANSMIT and RECEIVE” on page 1-369.

The RECEIVE command logs transmissions. See “Logging Function of TRANSMIT and RECEIVE” on page 1-370.

Receiving Data Sets and Messages with Security Labels

If your installation uses security labels and security options, any data sets or messages transmitted to you have a security label associated with them. In order for you to receive the data, you must be logged on at a security label equal to or greater than the security label with which the data was transmitted.

Some considerations for receiving data sets and messages with security labels are:

- You can only receive data sets and messages you are authorized to receive based on the security label you are logged on with.
- To receive data sets and messages with a greater security label, you can log on with a greater security label if your TSO/E user ID is authorized to do so. Then you can use the RECEIVE command to view the messages and data sets.
- If you cannot log on with a security label that allows you to receive the data set or message, the system deletes the data, unless your installation uses a JES installation exit to take some other action.
- You do not receive a notice that you have data sets or messages to receive if they were transmitted with a security label that is greater than the security label with which you are logged on.

RECEIVE Command Examples

In the following examples, the transmitting user is assumed to have user ID USER1 on node NODEA and the receiving user is assumed to have user ID USER2 on node NODEB. The sending user has a NAMES data set as follows:

```
* Control section
:altctl.DEPT.TRANSMIT.CNTL
:prolog.Greetings from John Doe.
:prolog.
:epilog.
:epilog.Yours,:epilog.John Doe :epilog.NODEA.USER1
*
* Nicknames section.
*
:nick.alamo   :list.Jim Davy      :logname.alamo   :notify.
:nick.addrchg :list.joe davy jim  :nolog           :nonotify
:nick.Joe     :node.nodeb  :userid.user2    :name.Joe Doe
:nick.Me      :node.nodea  :userid.user1    :name.me
:nick.Davy    :node.alamo  :userid.CROCKETT :name.Davy Crockett
:nick.Jim     :node.ALAMO  :userid.Bowie    :name.Jim Bowie
```

In the examples involving the RECEIVE command, data entered by the user appears in lowercase and data displayed by the system is in uppercase.

Example 1

Transmit a copy of the ‘SYS1.PARMLIB’ data set to Joe, identifying Joe by his node and user ID.

```
transmit nodeb.user2 da('sys1.parmlib')
```

Example 2

Joe receives the copy of ‘SYS1.PARMLIB’ transmitted above.

```
receive
Dataset SYS1.PARMLIB from USER1 on NODEA
Enter restore parameters or 'DELETE' or 'END' +
<null line>
Restore successful to dataset 'USER2.PARMLIB'
-----------------------------------------------
No more files remain for the RECEIVE command to process.
```

In the above example, Joe has issued the RECEIVE command, seen the identification of what arrived, and chosen to accept the default data set name for the arriving file. The default name is the original data set name with the high-level qualifier replaced by his user ID.

Example 3

Transmit two members of ‘SYS1.PARMLIB’ to Joe, and add a message identifying what was sent. Joe is identified by his NICKNAME, leaving it to TRANSMIT to convert it into node and user ID by the nicknames section of the NAMES data set.

```
transmit joe da('sys1.parmlib') mem(ieasys00,ieaips00) line
ENTER MESSAGE FOR NODEB.USER2
Joe,
   These are the parmlib members you asked me to send you.
They are in fact the ones we are running today.
Yours, John Doe
<null line>
```

The message text in this example was entered in line mode which would be unusual for a user on a 3270 terminal, but which is easier to show in an example.

Example 4

Joe begins the receive process for the members transmitted in Example 3 and ends the receive without actually restoring the data onto the receiving system, because Joe does not know where he wants to store the data.

```
receive
Dataset SYS1.PARMLIB  from USER1 on NODEA
Members: IEASYS00, IEAIPS00
Greetings from John Doe.
Joe,
   These are the parmlib members you asked me to send you.
They are in fact the ones we are running today.
Yours, John Doe
NODEA.USER1
Enter restore parameters or 'DELETE' or 'END' +
end
```

In the above example, notice that the PROLOG and EPILOG lines have been appended to the message entered by the sender. In an actual RECEIVE operation, the original message text would appear in both uppercase and lowercase just as the sender had entered it (assuming the receiver's terminal supports lowercase.)

Example 5

Joe receives the ‘SYS1.PARMLIB’ members transmitted in Example 3. Specify space parameters for the data set that will be built by RECEIVE to leave space for later additions.

```
receive
Dataset SYS1.PARMLIB from USER1 on NODEA
Members: IEASYS00, IEAIPS00
Greetings from John Doe.
Joe,
   These are the parmlib members you asked me to send you.
They are in fact the ones we are running today.
Yours, John Doe
NODEA.USER1
Enter restore parameters or 'DELETE' or 'END' +
da('nodea.parmlib') space(1) cyl dir(10)
Restore successful to dataset 'NODEA.PARMLIB'
-----------------------------------------------
No more files remain for the RECEIVE command to process.
```

The received members IEASYS00 and IEAIPS00 are saved in the output data set with their member names unchanged.

Example 6

Send a message to a user on another system. For more information about the TRANSMIT command, see the “TRANSMIT Command” on page 1-362.

```
transmit davy
```

The system displays the following screen for input:

```
                    DATA FOR ALAMO.CROCKETT
0001   Davy,
0002     Did you check the report I gave you last week?
0003   Joe
0004
0005
  ⋮
```

Press PF3 to send the message.

In this example, the target user is identified by his nickname and no data set is specified, causing the terminal to be used as an input source. You can type your data, scroll using program function (PF) keys PF7 or PF19 and PF8 or PF20, and exit using PF3 or PF15, or cancel using the PA1 key.

Example 7

Send a member of a partitioned data set as a message. In this example, the member MEETINGS of the partitioned data set MEMO.TEXT is sent as a message to JOE.

```
transmit nodeb.joe msgds(memo.text(meetings))
 INMX000I 0 message and 7 data records sent as 5 records to NODEB.JOE
 INMX001I Transmission occurred on 07/27/87 at 09:00:35.
READY
```

JOE receives the message in his data set MY.LOG, instead of the default log data set, LOG.MISC:

```
receive logds(my.log)
 INMR901I Dataset ** MESSAGE ** from MIKE on NODED
 THIS IS A SCHEDULE OF STATUS MEETINGS FROM AUGUST THROUGH NOVEMBER:

 AUGUST      MONDAYS AT 9:00 A.M. IN MY OFFICE
 SEPTEMBER   TUESDAYS AT 10:00 A.M. IN YOUR OFFICE
 OCTOBER     WEDNESDAYS AT 10:00 A.M. IN JACK'S OFFICE
 NOVEMBER    MONDAYS AT 2:00 P.M. IN JILL'S OFFICE
```

RENAME Command

Use the RENAME command to:

- Change the name of a single-volume, non-VSAM cataloged, non-SMS managed data set.
- Change the name of a single or multi-volume, non-VSAM cataloged, SMS managed data set.
- Change the name of a member of a partitioned data set
- Create an alias for a member of a partitioned data set.

The Access Method Services ALTER command changes the name of VSAM data sets and is described in *DFSMS/MVS Access Method Services for VSAM*.

When a password protected data set is renamed, the data set does not retain the password. You must use the PROTECT command to assign a password to the data set before you can access it.

RENAME Command Syntax

```
►►──┬─RENAME─┬──old_name──new_name──┬──────────┬──────────────────────────►◄
    └─REN────┘                      └─ALIAS────┘
```

RENAME Command Operands

old_name

specifies the name that you want to change. The name that you specify can be the name of an existing data set or the name of an existing member of a partitioned data set.

new_name
specifies the new name to be assigned to the existing data set or member. If you are renaming or assigning an alias to a member, you can supply only the member name and omit all other levels of qualification.

ALIAS
specifies the member name supplied for *new_name* operand is to become an alias for the member identified by the *old_name* operand.

You can rename several data sets by substituting an asterisk for a qualifier in the *old_name* and *new_name* operands. The system changes all data set names that match the old name except for the qualifier corresponding to the asterisk's position.

Note: Do not use the RENAME command to create an alias for a linkage editor created load module.

RENAME Command Return Codes

Figure 1-42. RENAME Command Return Codes

0	Processing successful.
12	Processing unsuccessful. An error message has been issued.

RENAME Command Examples

Example 1

Operation: You have several non-VSAM data sets named:

```
userid.mydata.data
userid.yourdata.data
userid.workdata.data
```

that you want to rename:

```
userid.mydata.text
userid.yourdata.text
userid.workdata.text
```

You can specify either: or

```
rename *.data,*.text
```

Example 2

Operation: Assign an alias SUZIE to the partitioned data set member named ELIZBETH(LIZ).

```
REN 'ELIZBETH(LIZ)' (SUZIE) ALIAS
```

RUN Command

Use the RUN command to compile, load, and execute the source statements in a data set. The RUN command is designed specifically for use with certain program products. It selects and invokes the particular program product needed to process the source statements in the data set that you specify. Figure 1-43 shows which program product is selected to process each type of source statement.

Figure 1-43. Source Statement/Program Product Relationship	
Source	**Program Product**
Assembler	Assembler (F) and TSO Assembler Prompter
COBOL	OS/VS COBOL Release 2.4 and TSO COBOL Prompter
FORTRAN	FORTRAN IV (G1) and TSO FORTRAN Prompter Code and Go FORTRAN
PLI	PL/I Checkout Compiler or PL/I Optimizing Compiler
VSBACIC	VSBASIC

The RUN command and the RUN subcommand of EDIT perform the same basic function.

RUN Command Syntax

```
►►─┬─RUN─┬─data_set_name──┬──────────────┬──────────────────────────►
   └─R───┘                └─'parameters'─┘

►─┬─ASM──────────────────────────────────────────────────────────────►◄
  │      └─LIB(─┬─data_set─┬─)─┘
  │             └──────────┘
  ├─COBOL──────────────────────────────────────────────────────────────
  │      └─LIB(─┬─data_set─┬─)─┘
  │             └──────────┘
  ├─GOFORT─────────────────────────────────────────────────────────────
  │        ├─LMSG─┤  ├─FIXED─┤
  │        └─SMSG─┘  └─FREE──┘
  ├─FORT───────────────────────────────────────────────────────────────
  │      └─LIB(─┬─data_set─┬─)─┘
  │             └──────────┘
  │      ┌─OPT───┐
  ├─PLI──┤       ├──────────────────────────────────────────────────
  │      └─CHECK─┘   └─LIB(─┬─data_set─┬─)─┘
  │                         └──────────┘
  └─┤ VSBASIC ├────────────────────────────────────────────────────────
```

VSBASIC:

```
├─VSBASIC─┬─SPREC─┬─┬─NOTEST─┬─┬─GO───┬─┬─NOSTORE─┬─┬─NOPAUSE─┬──►
          └─LPREC─┘ └─TEST───┘ └─NOGO─┘ └─STORE───┘ └─PAUSE───┘

  ┌─SOURCE─┬──────────────────────────────────────────────────────┤
►─┤        ├─┬──────────────┬─
  └─OBJECT─┘ └─SIZE(value)──┘
```

RUN Command Operands

data_set_name ‘*parameters*’

specifies the name of the data set containing the source program. A string of up to 100 characters can be passed to the program by the parameters operand (valid only for data sets which accept parameters).

ASM

specifies the TSO Assembler Prompter program product and the Assembler (F) compiler are to be invoked to process source programs.

If the rightmost qualifier of the data set name is ASM, this operand is not required.

LIB(*data_set*)
specifies the library or libraries that contain subroutines needed by the program you are running. These libraries are concatenated to the default system libraries and passed to the loader for resolution of external references. This operand is valid only for the following data set types: ASM, COBOL, FORT, and PLI (Optimizer).

COBOL
specifies the TSO COBOL Prompter and the OS/VS COBOL program product are to be invoked to process the source program. If the rightmost qualifier of the data set name is COBOL, this operand is not required.

GOFORT
specifies the Code and Go FORTRAN program product is to be invoked to process the source program. If the right most qualifier of the data set name is GOFORT, this operand is not required.

LMSG | SMSG

LMSG specifies long form diagnostic messages are to be provided.

SMSG specifies short form diagnostic messages are to be provided.

FIXED | FREE

FIXED specifies statements adhere to the standard FORTRAN column requirements and are 80 bytes long.

FREE specifies statements are of variable lengths and do not conform to set column requirements.

FORT
specifies the TSO FORTRAN Prompter and the FORTRAN IV (G1) program products are to be invoked to process the source program.

PLI
specifies the PL/I Prompter and either the PL/I Optimizer compiler or the PL/I Checkout compiler are to be invoked to process the source program. If the rightmost qualifier of the data set name is PLI, this operand is not required.

CHECK | <u>OPT</u>

CHECK specifies the PL/I Checkout compiler. If you omit this operand, the OPT operand is the default value.

<u>OPT</u> specifies the PL/I Optimizing compiler. If both CHECK and OPT are omitted, OPT is the default value.

VSBASIC
specifies the VSBASIC program product is to be invoked to process the source program.

LPREC | <u>SPREC</u>

LPREC specifies long precision arithmetic calculations are required by the program.

SPREC specifies short precision arithmetic calculations are adequate for the program. SPREC is the default value.

TEST | NOTEST

TEST specifies testing of the program is to be performed.

NOTEST specifies the TEST function is not to be performed. NOTEST is the default value.

GO | NOGO

GO specifies the program is to receive control after compilation. GO is the default value.

NOGO specifies the program is not to receive control after compilation.

STORE | NOSTORE

STORE specifies the compiler is to store an object program.

NOSTORE specifies the compiler is not to store an object program. NOSTORE is the default value.

PAUSE | NOPAUSE

PAUSE specifies the compiler is to prompt to the terminal between program chains.

NOPAUSE specifies no prompting between program chains. NOPAUSE is the default value.

SOURCE | OBJECT

SOURCE specifies the new source code is to be compiled. SOURCE is the default value.

OBJECT specifies the data set name entered is a fully-qualified name of an object data set to be executed by the VSBASIC compiler.

SIZE(*value***)**
specifies the number of 1000-byte blocks of user area where value is an integer of one to three digits.

Determining Compiler Type

The system uses two sources of information to determine which compiler is to be used. The first source of information is the optional operand (ASM, COBOL, FORT, PLI, or VSBASIC) that you can specify for the RUN command. If you omit this operand, the system checks the descriptive qualifier of the data set name that is to be executed. If the system cannot determine the compiler type from the descriptive qualifier, you are prompted for it.

The RUN command uses standard library names, such as SYS1.FORTLIB and SYS1.COBLIB, as the automatic call library. This is the library searched by the

linkage editor to locate load modules referred to by the module being processed for resolution of external references.

RUN causes other commands to be executed from an in-storage list. If an error occurs, one of these commands might issue a message that has additional levels of information. This additional information is not available to the user unless the PAUSE option is indicated in the user's profile. The PAUSE option is described in the section under the PROFILE command.

RUN Command Return Codes

Figure 1-44. RUN Command Return Codes

0	Processing successful.
12	Processing unsuccessful. An error message has been issued.

RUN Command Examples

Example 1

Operation: Compile, load, and execute a source program composed of VSBASIC statements.

Known:

- The name of the data set containing the source program is DDG39T.MNHRS.VSBASIC.

```
run mnhrs.vsbasic
```

SEND Command

Use the SEND command or the SEND subcommand of EDIT to send a message to:

- One or more users
- The master console operator
- A specific operator
- A specific operator console.

In parallel sysplex systems the users may be on any system in the sysplex.

In order for the recipient to receive and display the message, the recipient's profile must include the INTERCOM operand. To change the profile, use the PROFILE command.

By default, when you issue the SEND command with the NOW operand, the message is displayed on the recipient's screen if he or she is logged on and receiving messages. If the receiver is not logged on or is not receiving, the message is deleted and you receive a message stating why the message was not displayed.

If you issue SEND with the LOGON operand and the recipient is logged on and receiving, the message is also displayed. If the recipient is not logged on when you send the message, the message is stored in the broadcast data set. (If your installation uses individual user logs, SEND stores the message in the user log,

truncating trailing blanks. Otherwise, SEND stores the message in the broadcast data set and does not truncate trailing blanks.)

When you issue SEND with the SAVE operand, the message is stored even if the recipient is logged on. SEND stores the message in the broadcast data set unless your installation uses individual user logs, in which case, the message is stored in the recipient's user log.

Installations can use security enhancements to customize how the SEND command works. For example, using RACF, an installation can control which users can send messages to other users. If your installation uses these security features and you send a message to a user that you are not authorized to send messages to, the system cancels your message and displays an informational message on your terminal.

SEND also works differently if your installation uses security labels and security checking. Each time you send a message, the security label you are logged on with is associated with the message. The security label is used to determine if the recipient can view the message.

If you issue SEND NOW or SEND LOGON, the sender's current security label is associated with the message. If the recipient is logged on at a security label that is equal to or greater than the security label of the message, the message is displayed immediately. If SEND NOW was specified and the recipient's security label is less than the message's security label, the message is cancelled. If SEND LOGON was specified and the recipient's security label is less than the message's security label, the message is saved in the recipient's user log.

If the message you send is to be saved (when you issue SEND SAVE or SEND LOGON and the recipient is not logged on), the message's security label is saved along with the message in the recipient's user log. The recipient can view messages saved in the user log by issuing the LISTBC command. All messages in the recipient's user log that have a security label that is less than or equal to the security label of the recipient are then displayed. Messages that have a security label higher than the security label the recipient logged on with are not displayed. See “LISTBC Command” on page 1-187 for more information on receiving messages from a user log.

If your installation uses security labels and security checking, messages are stored in user logs. If you try to send a message to another user who does not have a user log and the message is to be saved, the message is not sent. You get a message explaining why the message cannot be saved.

The syntax and function of the SEND subcommand of EDIT is the same as that of the SEND command.

SEND Command Syntax

```
                                   ┌─2──────────┐
                                   │            │
                                   │            │
                                   │            │
```

If you send a message with a length of greater than 72 characters to OPERATOR or CONSOLE using the SEND command, the message is issued as two WTOs.

NOW | LOGON | SAVE

NOW specifies that you want the message to be sent immediately. If the recipient is not logged on or is not receiving messages, you are notified and the message is deleted. If your installation uses security labels and security checking and the recipient is logged on and is receiving messages, but does not have an appropriate security label to view the message, you are notified and the message is deleted. NOW is the default value.

LOGON specifies that you want the message retained in the SYS1.BRODCAST data set or the user log data set, if the recipient is not logged on, is not receiving messages, or cannot receive messages because of SECLABEL checking. If the recipient is currently using the system and receiving messages, the message is sent immediately. If your installation uses security labels and security checking, and the recipient is logged on, is receiving messages, and has an appropriate security label to view the message, then the message is sent immediately. Otherwise, the message is saved, and the recipient must issue LISTBC or LOGON specifying MAIL to retrieve the message.

SAVE specifies the message text is to be stored in the mail section of SYS1.BRODCAST or the user log data set without being sent to any user. Messages stored in the broadcast data set or the user log data set can be retrieved by using either LISTBC or LOGON commands.

NOWAIT | WAIT

NOWAIT specifies that you do not want to wait if system output buffers are not immediately available for all specified logged-on terminals. You are notified of all specified users who did not receive the message. If you specified LOGON, mail is created in the SYS1.BRODCAST data set or the user log data set for the specified users whose terminals are busy or who have not logged on. NOWAIT is the default value.

WAIT specifies that you want to wait until system output buffers are available for all specified logged on terminals. This ensures that the message is received by all specified logged on users, but it also means that you might be locked out until all such users have received the message.

SEND Command Return Codes

Figure 1-45. SEND Command Return Codes

0	Processing successful.
12	Processing unsuccessful.

The following return codes are valid only if you have an installation-defined user log data set:

Figure 1-46. SEND Command Return Codes (Installation-Defined User Log Data Set)	
0	Message was successfully sent for display; all users received it.
4	Message was successfully stored. Either the user is not logged on, or is not logged on with a security label that allows the user to view the message.
8	Message was successfully stored; saved the message.
12	Message was not displayed; user is not logged on.
16	Message was not displayed; user's terminal is busy.
18	Sender not permitted to send messages to one or more specified users.
20	Message was not displayed; user is not accepting messages.
22	Message cannot be viewed by one or more specified users; their security label is lower than the sender's security label.
24	Message was not stored; saving is not allowed.
26	One or more users did not have an individual user log and the message could not be saved in the broadcast data set.
28	Message was not stored; user log unavailable.
32	Message was not sent; user denied access.
36	Message was not sent; SEND is inactive.
40	Message was not sent; no such user ID.
44	Message was not sent; command is not authorized.
92	Message was not sent; system error.

SEND Command Examples

Example 1

Operation: Send a message to the master console operator.

Known:

- The message: What is the weekend schedule?

```
send 'what is the weekend schedule?'
```

Example 2

Operation: Send a message to two other terminal users.

Known:

- The message: If you have data set ‘mylib.load’ allocated, please free it. I need it to run my program.
- The user identification for the terminal users: JANET5 and LYNN6
- The message is important and you want to wait until the recipients have received the message.

```
send 'if you have data set "mylib.load" allocated, -
please free it. i need it to run my program.' -
user(janet5,lynn6) wait
```

Example 3

Operation: Send a message that is to be delivered to ‘BETTY7’ when she begins her terminal session or now if she is currently logged on.

Known:

- The recipient's user identification: BETTY7
- The message: Is your version of the simulator ready?
- If she is not logged on, you want to save the message until she logs on again. There is no rush for her to get it and to respond to it.

```
send 'is your version of the simulator ready?' -
user(betty7) logon
```

Example 4

Operation: Send a message to the operator console ‘TAPELIB’.

Known:

- The console name: TAPELIB
- The message: Please mount tape number A021. I need it to run my program.

```
send 'Please mount tape number A021. I need -
it to run my program.'  CN(TAPELIB)
```

SMCOPY Command

Use the SMCOPY command to copy all or part of a stream or data set to another stream or data set (that is, stream to stream, stream to data set, data set to stream, or data set to data set).

Notes:

1. When using SMCOPY under ISPF, you must be logged on to Session Manager to copy TSOOUT and TSOIN streams. Also, be certain SESSMGR is set to YES in ISPF. For information about setting SESSMGR to YES, see *OS/390 ISPF Planning and Customizing*.
2. If the source and target of the copy request are both data sets, (SYSOUT or QSAM), you do not have to be logged on under the Session Manager to use the SMCOPY command.

SMCOPY Command Syntax

```
                          ┌─FROMSTREAM─┐   ┌─TSOOUT──────┐
                          ├─FS─────────┤─(─┼─stream_name─┼─)─┐
 ►►─┬─SMCOPY─┬──────────┤                                   │──────────►
    └─SMC────┘          └─FROMDATASET─┬─(dsname)──────────┘
                                        └─FDS───────────┘

                   ┌─A──────────┐
   ┌─PRINT(──────┼─sysout_class─┼─)──┐   ┌─CAPS──────┐
►──┼──────────────────────────────────┼───┼───────────┼──────────────────►
   ├─┬─TODATASET─┬─(dsname)──────────┤   ├─ASIS──────┤   ┌─┬─FORMAT──┬─┐
   │ └─TDS───────┘                    │   └─NOTRANS───┘   │ └─FMT─────┘ │
   └─┬─TOSTREAM──┬─(stream_name)─────┘                     ├─┬─NOFORMAT─┬─┤
     └─TS────────┘                                         │ └─NOFMT────┘ │
                                                           └─┬─PREFORMAT─┬─┘
                                                             └─PREFMT────┘

►──┬──────────────────────────────────────────────────────────────────►◄
   └─LINE(start_line──┬──────────────┬─)─┘
                      └─:stop_line───┘
```

SMCOPY Command Operands

FROMDATASET(*dsname*)
specifies the name of the data set that contains the information to be copied. The data set must be a sequential data set or a member of a partitioned data set with either fixed- or variable-length records. The data set must reside on a volume that is mounted or on a device that is on-line.

FROMSTREAM(*stream_name*)
specifies the name of the input stream that contains the information to be copied. If you do not specify a data set to be copied, the default is FROMSTREAM.

PRINT(*sysout_class*)
specifies that the information is to be copied to a SYSOUT data set of the specified SYSOUT class and printed on a system printer. You can print up to 132 characters per line.

TODATASET(*dsname*)
specifies the name of the data set into which the information is to be copied. The data set must be sequential or a member of a partitioned data set with either fixed-or variable-length records. The data set must reside on a volume that is mounted or on a device that is on-line.

If the data set does not exist, the Session Manager allocates a new data set. If the information is being copied from a data set (the FROMDATASET operand is specified), the attributes from this data set are used except for the size which defaults to 5 tracks primary and 5 tracks secondary space. If more space is required for the data set than the default provides, you must preallocate the data set. If the information is being copied from a stream (the FROMSTREAM operand is specified), the new data set is allocated with the following attributes:

RECFM
VB or VBA if FORMAT or PREFORMAT is specified.
LRECL
<256
BLKSIZE
3120

TOSTREAM(*stream_name***)**
specifies the name of the output stream for the copy operation.

ASIS | CAPS | NOTRANS

ASIS specifies that the Session Manager is to leave lowercase letters as lowercase letters and translate the unprintable characters to blanks (X'40').

Use the ASIS operand if the information is to be printed on a printer with a dual-case print train (TN or T11).

CAPS specifies that the Session Manager is to translate lowercase letters to uppercase and translate the unprintable characters to blanks (X'40').

NOTRANS specifies that no translation is to occur.

FORMAT | NOFORMAT | PREFORMAT

FORMAT specifies that carriage control characters are to be placed in the copied information. If the information is being placed in a stream, the highlighted lines are highlighted in the stream.

If the information is being copied to a data set, the record format must be FBA or VBA to indicate the presence of ASA control characters. If the data set is new, the Session Manager allocates it with a VBA record format.

FORMAT is ignored if FROMSTREAM is not specified.

NOFORMAT specifies that no control characters are to be placed in the copied information.

If the information is being copied from a data set, the data set must have a FB or VB record format. If the information is being copied from a stream to a data set, the data set must have a FB or VB record format. If the information is being copied from a data set to a data set, both data sets must have the same format (FB or VB). If the data set that the information is going into is new, the Session Manager allocates it with a VB record format (if it is being copied to a stream) or it is allocated with the same record format as the data set it is coming from (for a data set to data set copy operation).

PREFORMAT specifies that the source for the copy (stream or data set) already contains carriage control characters. Use this operand when the SNAPSHOT command was previously used to place information in a stream or data set.

If the information is being copied from a data set, the data set must have a FBA or VBA record format. If the information is being copied from a stream to a data set, the data set must have a FBA or VBA record format. If the information is being copied from a data set to a data set, both data sets must have the same format (FBA or VBA). If the data set that the information is going into is new, the Session Manager allocates it with a VBA record format (if it is being copied to a stream) or it is allocated with the same record format as the data set it is coming from (for a data set to data set copy operation).

LINE(*start_line***:***stop_line***)**
specifies the range of lines to be copied. The default is the first line of the information and the last line of the information.

If the information is being copied from a stream, you can find specific line numbers by using the QUERY, SMFIND, or FIND.LINE commands. If the information is being copied from a data set, 'LINE' represents records of the data set, not the line numbers within a numbered data set.

SMCOPY Command Return Codes

Figure 1-47. SMCOPY Command Return Codes

0	Processing successful.
4	Processing successful. Copy operation ended at the end of file or at the end of stream.
8	Processing unsuccessful. The copy was not performed.
12	Processing unsuccessful. Internal error, contact your system programmer.

SMCOPY Command Examples

Example 1
Copy the TSOOUT stream to the system printer, translating all lowercase letters to uppercase.

```
smcopy
```

Example 2
Copy the member ZLOGON of the data set 'SYS1.CLIST' to the member ZLOGON of the data set TEST.CLIST.

```
smcopy fromdataset('sys1.clist(zlogon)')
       todataset(test.clist(zlogon))
```

Example 3
Copy the data set containing TSO/E commands from the data set SAMPLE and place these commands in the TSOIN stream where they will be executed.

```
smcopy fromdataset('sample.commands.data')
       tostream(tsoin)
```

SMFIND Command

Use the SMFIND command to locate a string of characters in a stream. If the text string is found, the Session Manager displays the line number of the text string in the output stream for the TSO/E function (TSOOUT in the default environment) and puts the line number in register 15. If operating from a CLIST, you can access the line number from the CLIST variable '&LASTCC'.

Note: SMFIND command processing assumes that the last line of the output stream is the SMFIND command. Therefore, the SMFIND command does not search the last line of the output stream.

SMFIND Command Syntax

```
►►─┬─SMFIND─┬─text_string──┬──────────────────────────────────────►
   └─SMF────┘              │                ┌─TSOOUT──────┐
                           └─STREAM(─────┬──────────────┬──────)─┘
                                         └─stream_name──┘

►─┬─BACKWARD─┬─┬─ALL───┬─┬─ANY───┬─┬──────────────────────────────►◄
  └─FORWARD──┘ └─FIRST─┘ └─ASIS──┘ └─LINE(line_1──┬──────────┬──)─┘
                                                  └─:line_2──┘
```

SMFIND Command Operands

text_string
specifies the string of characters to be found. The *text_string* can be up to 256 characters in length and must be enclosed in delimiters that are not present in the *text_string*.

STREAM(*stream_name***)**
specifies the name of the stream to be searched.

BACKWARD | FORWARD

BACKWARD specifies that the Session Manager is to search for the *text_string* from the current location backward toward the top of the stream.

FORWARD specifies that the Session Manager is to search for the *text_string* from the current location forward toward the bottom of the stream.

ALL | FIRST

ALL specifies that the Session Manager is to find all occurrences of the *text_string*. The line number of each found *text_string* is displayed in the output stream for the TSO/E function. Register 15 (and the CLIST variable &LASTCC) contains the line number of the last occurrence of the *text_string*.

FIRST specifies that the Session Manager is to find only the first occurrence of the *text_string*. The Session Manager displays the line number of the found *text_string* in the output stream for the TSO/E function. It also places the number in register 15 and the CLIST variable &LASTCC.

ANY | ASIS

ANY specifies that upper and lowercase differences are to be ignored when finding the *text_string*.

ASIS specifies that the Session Manager is to find an exact match of the entered *text_string*.

LINE(*line_1***:***line_2***)**
specifies the range of lines to be searched.

If only *line_1* is specified, the Session Manager searches from that line to the top or bottom of the stream depending on whether BACKWARD or FORWARD is specified.

If you specify a value for *line_1* or *line_2* that is not in the stream, the Session Manager uses the top or bottom line in the stream.

SMFIND Command Return Codes

Upon completion, SMFIND returns the following:

Figure 1-48. SMFIND Command Return Codes	
0	Return code 0 means one of the following: • The *text_string* was not found. • The specified stream was not found. • The command was incorrectly specified and SMFIND was unable to prompt for correct information.
Other	A positive integer specifying the line number of the found *text_string*. The maximum value is 16,777,216.

SMFIND Command Examples

Example 1

Find the next occurrence of ‘time’ in the TSOOUT stream.

```
smfind 'time' forward
```

Example 2

Find the previous occurrence of ‘time’ in the TSOOUT stream.

```
smfind 'time'
```

SMPUT Command

Use the SMPUT command to place a text string in a stream. If you place the text string in the TSOIN stream, it is interpreted as a TSO/E command. If you place the text string in the SMIN stream, it is interpreted as a Session Manager command.

SMPUT Command Syntax

```
►►─┬─SMPUT─┬─'text_string'─┬─SMIN──────────┬──────────────────────────►
   └─SMP───┘               └─stream_name───┘
►──┬──────────────────────────────────────────────────────────────────►◄
   └─INTENSITY(─┬─1─────────┬─)─┘
                └─intensity─┘
```

SMPUT Command Operands

text_string
specifies the string of characters to be placed in the stream. The *text_string* must be enclosed in delimiters that are not in the *text_string*. It can be up to 32768 characters in length, excluding the delimiters. If the *text_string* is being sent to the SMIN stream, it can be up to 512 characters in length.

stream_name
specifies the name of the stream where the *text_string* is to be placed.

INTENSITY(*intensity* **| 1)**
specifies the brightness at which the information in the stream is to be displayed. The valid values are:

0 The information in the stream is not to be displayed. You can see the line that the information occupies, but the information itself is invisible.

1 The information is to be displayed at normal intensity.

2 The information is to be highlighted.

Note: You must specify *stream_name* if you specify a value for INTENSITY.

SMPUT Command Return Codes

Figure 1-49. SMPUT Command Return Codes

0	Processing successful. **Note:** If the *text_string* contained Session Manager or TSO/E commands, the zero return code does not indicate successful execution of those commands.
4	Syntax error.
8	The stream was not found.
12	Processing unsuccessful.

SMPUT Command Examples

Example 1

Place the TSO/E TIME command highlighted in the TSOIN stream.

```
smput 'time' tsoin intensity(2)
```

STATUS Command

Use the STATUS command to have the status of batch jobs displayed at your terminal. You can obtain the status of all batch jobs, several specific batch jobs, or a single batch job. The information you receive for each job tells you whether it is awaiting execution, is currently executing, or has completed execution but is still on an output queue. It also indicates whether the job is in hold status. An attention interrupt during the processing of STATUS results in termination of the command, but not the job.

STATUS is a foreground-initiated-background (FIB) command. You must be authorized by installation management to use STATUS. This command is generally used in conjunction with the CANCEL, SUBMIT, and OUTPUT commands.

Requesting an attention interrupt after issuing a STATUS command might terminate that command's processing. In this case, you cannot resume STATUS processing by pressing the Enter key as you can after most attention interrupts.

STATUS Command Syntax

```
►►──┬─STATUS─┬──┬──────────────────────────────────────────────┬──►◄
    └─ST─────┘  │                                              │
                │   ┌──────────────────────────────────────┐   │
                │   │   ┌─,─┐                              │   │
                └─(─┴─jobname──┬──────────────────────────┴─)─┘
                               └─(jobid)─┘
```

STATUS Command Operand

(*jobname* **(***jobid***))**

specifies the name of the batch job for which you want to know the status. If two or more jobs have the same job name, the system displays the status of all the jobs encountered and supplies job IDs for identification. When more than one job name is included in the list, the list must be enclosed within parentheses. When you specify a list of job names, you must separate the job names with standard delimiters. By default, if you do not specify any job names, you receive the status of all batch jobs in the system whose job names consist of your user ID and one identifying character (alphabetic, numeric, or one of the special characters #, $, or @). The processing may be different if your installation has replaced the default IBM-supplied installation exit.

The optional job ID subfield can consist of 1 to 8 alphanumeric characters. The first character must be alphabetic or one of the special characters (#, $, or @). The job ID is a unique job identifier assigned by the job entry subsystem (JES) at the time the job was submitted to the batch system. Currently the only valid forms of job identifiers (*jobid*) assigned by JES are:

`JOBnnnnn` or `Jnnnnnnn` – Jobs
`STCnnnnn` or `Snnnnnnn` – Started Tasks
`TSUnnnnn` or `Tnnnnnnn` – TSO Users

STATUS Command Return Codes

Figure 1-50. STATUS Command Return Codes

0	Processing successful.
12	Processing unsuccessful. An error message has been issued.

SUBMIT Command

Use the SUBMIT command to submit one or more batch jobs for background processing. Background processing is explained in *OS/390 TSO/E User's Guide*.

SUBMIT is a foreground-initiated-background (FIB) command. You must be authorized by installation management to use SUBMIT. This command is generally used in conjunction with the CANCEL, STATUS, and OUTPUT commands.

Users can submit jobs containing only TSO/E commands to execute commands in the background. If a job contains the LOGON command and SUBMIT finds it before encountering a JOB statement, SUBMIT uses the LOGON command to build the JOB and EXEC statements. If your installation uses security labels and security checking, you can specify LOGON in the job stream and include the SECLABEL operand. LOGON builds a JOB statement that contains the security label from the

LOGON command. Using the SECLABEL operand lets users submit a job with a different security label than the security label they used to log on to TSO/E.

Users also can submit jobs to run at a different security label than the one they logged on with by specifying the SECLABEL operand on the JOB statement. The SECLABEL that is specified must be one that the user has access to.

If a job does not contain the LOGON command or JOB statement with a security label, the job runs at the security label the user logged on with.

If users meet certain RACF requirements, they can define another user to submit their jobs for them. When this method of submitting jobs, called surrogate job submission, is used, jobs are submitted from the second (surrogate) user's TSO/E ID. The jobs run as if submitted by the first user. For more information about surrogate job submission, see *OS/390 Security Server (RACF) General User's Guide*.

Requesting an attention interrupt after issuing a SUBMIT command might terminate that command's processing. In this case, you cannot resume SUBMIT processing by pressing the Enter key as you can after most attention interrupts.

SUBMIT Command Syntax

```
                                                          ┌NOHOLD┐
►►─┬SUBMIT┬──┬─*──────────────────────────┬──┬PAUSE───┬──┬────────┬──►
   └SUB───┘  └─(─┬─data_set─┬─)─┘          └─┬END(nn)─┘  └HOLD────┘
                 └◄─────────┘

   ┌NOJOBCHAR──────────┐                    ┌USER(user_id)┐
►──┬────────────────────┬──────────────────┬──┬────────────┬──►
   └JOBCHAR(characters)┘  ┌PASSWORD──┐      └NOUSER───────┘
                          └NOPASSWORD┘

   ┌NOTIFY──┐
►──┬────────┬──────────────────────────────────────────────────►◄
   └NONOTIFY┘
```

SUBMIT Command Operands

(*data_set***) | ***

(*data_set***)** specifies one or more data set names or names of members of partitioned data sets that define an input stream (JCL plus data). If you specify more than one data set name, separate them with delimiters, and enclose them in parentheses.

***** An asterisk (*) specifies that the job stream is to be obtained from the current source of input (for example, the terminal or currently executing CLIST). TSO/E commands can be entered directly without creating and editing a data set.

Note: All characters in the job stream are converted to uppercase prior to being processed.

This positional operand and the *data_set* positional operand are mutually exclusive. Either of both operands is required.

The SUBMIT * function described here is not available in EDIT mode. Job stream input received directly from the terminal or any other source will not be saved after the job is submitted. The SUBMIT * subcommand of EDIT continues to select the current data set as the input job stream. See the SUBMIT subcommand of EDIT for more information.

If the submitted job contains a job statement, the SUBMIT operands that generate job statements are ignored. The SUBMIT operands do not override the job statement.

Note: When TSO/E processes a job in a CLIST that uses the SUBMIT * command, statements following the DD * statement are left adjusted to column 1, thereby removing leading spaces. (This is unique to CLIST processing only; it is not a batch concern.) Refer to *OS/390 TSO/E CLISTs*, for a procedure that preserves the leading spaces in a CLIST.

PAUSE | END(*nn*)

PAUSE specifies that you want to make a decision after the job stream has been read in. This decision is to either continue the SUBMIT * process or terminate. If this operand is omitted, the job stream is processed when the end of the job stream is detected. The default is not to pause when the end of the job stream is reached. If you have not specified PAUSE and you subsequently make an error, the only way the submission can be aborted is with an attention interrupt. This is an optional operand.

Pause is valid only when * (asterisk) is specified for the positional parameter and you are not in EDIT mode.

END(*nn*) specifies a 1- or 2-character string to indicate the end of the job stream. Only alphabetic, numeric, or special characters #, $, or @ are valid END characters. If this operand is not specified, a null or blank line indicates the end of the job stream. Specifying this operand allows blank lines to be part of the job stream. To terminate the job stream, the END character(s) must begin in column 1 and be the only data on the input line. The END character string is not considered part of the job stream. END is valid only when * (asterisk) is specified for the positional parameter and when you are not in EDIT mode.

HOLD | <u>NOHOLD</u>

HOLD specifies SUBMIT is to have job output held for use with the OUTPUT command by defaulting to the held MSGCLASS supplied by the installation manager for the user. Output directed to DD statements is held if SYSOUT=* or HOLD=YES is specified on the DD statement.

<u>NOHOLD</u> specifies job output is not to be held. NOHOLD is the default.

JOBCHAR(*characters*) | <u>NOJOBCHAR</u>

JOBCHAR(*characters*) specifies characters to be appended to the jobname on every JOB statement in the data set being submitted. Use 1 character if you plan to use the STATUS command and your job name is your user ID.

NOJOBCHAR specifies SUBMIT is to prompt you for jobname characters whenever the job name is the user ID. If prompting is not possible, the jobname character defaults to the letter X. NOJOBCHAR is the default. The user ID is determined by certain rules. See the USER operand for a list of the rules.

PASSWORD | NOPASSWORD

PASSWORD specifies a PASSWORD operand is to be inserted on the generated JOB statement by SUBMIT, if RACF is installed. SUBMIT prompts you to enter the password value in print-inhibit mode, if the terminal supports the feature. This operand is not required if a generated JOB statement or RACF is not installed. If RACF is installed, PASSWORD is the default. The password used is:

- The password (if executing in the foreground) entered on the LOGON command initiating the foreground session. The current password is used for RACF-defined users. If you have updated your password using the LOGON command, you must enter the PASSWORD operand with the new password on the SUBMIT command.
- The password on the LOGON command (if executing in the background) specified in the submitted data set. If a LOGON command is not in the data set, the USER and PASSWORD operands are not to be included on the generated JOB statement.

NOPASSWORD specifies the PASSWORD and USER operands are not included on the generated JOB statement. If RACF is not installed, NOPASSWORD is the default.

USER(*user_id*) | NOUSER

USER(*user_id*) specifies a USER operand is to be inserted on the generated JOB statement, if RACF is installed. The user ID specified is also used as the jobname for the generated JOB statement. For job name or user ID comparison for NOJOBCHAR processing, see the NOJOBCHAR operand description.

If neither USER nor NOUSER is entered and RACF is installed, USER is the default. The default user ID used is determined by the following rules. The rules are ordered. If the first rule is met, then that user ID is used.

1. The user ID specified on a LOGON command in the data set being submitted.
2. The user ID specified on the LOGON command (if executing in the foreground) initiating the foreground session; the user ID specified on the USER operand (if executing in the background, RACF-defined users only) on the JOB statement initiating the background session.
3. The default user ID SUBMITJB is used.

Note: If a password is not specified, the USER operand is not generated on the job statement. You can specify a password:

- On the user's SUBMIT command
- On the LOGON command data set being submitted

- In the LOGON for the current session, when executing in the foreground, by requesting that the password be stored in the TSB via the LOGON exit.

NOUSER specifies generated JOB statements do not include USER and PASSWORD operands. If USER is not specified and RACF is not installed, NOUSER is the default.

NOTIFY | NONOTIFY

NOTIFY specifies that you are to be notified when your job terminates in the background, if a JOB statement has not been provided. If you have elected not to receive messages, the message is placed in the broadcast data set. You must then enter LISTBC to receive the message. If a JOB statement is generated, NOTIFY is the default.

When you supply your own JOB statement, use the NOTIFY=user_id keyword on the JOB statement if you want to be notified when the job terminates. SUBMIT ignores the NOTIFY keyword unless it is generating a JOB statement.

If NOTIFY or NONOTIFY is not specified, the default is:

- The NOTIFY operand (if executing in the foreground) is inserted on the generated JOB statement.
- The NOTIFY operand (if executing in the background) is only inserted on the generated JOB statement for RACF-defined users who have specified the USER operand on the JOB statement initiating the background session.

NONOTIFY specifies a termination message is not to be issued or placed in the broadcast data set. The NONOTIFY keyword is only recognized when a JOB statement has not been provided with the job that you are processing.

SUBMIT Command Return Codes

Figure 1-51. SUBMIT Command Return Codes

0	Processing successful.
12	Processing unsuccessful. An error message has been issued.

SUBMIT Command Examples

Example 1

Operation: Submit two jobs for batch processing.

Known:

- The data sets that contain the jobs: ABTJQ.STRESS.CNTL and ABTJQ.STRAIN.CNTL

```
submit (stress, strain)
```

Example 2

Operation: Concatenate and submit data sets as a single job.

Known:

- The data set that contains the JCL for the job is JCL.CNTL(ASMFCLG)
- The data set that contains the input data is MYDATA.DATA

```
submit (jcl(asmfclg) mydata)
```

This command causes a single background job to be submitted and simultaneously concatenates a generated job card (if required), JCL, and the data. Each data set is not submitted as a separate job.

TERMINAL Command

Use the TERMINAL command to define operating characteristics that depend primarily upon the type of terminal that you are using. You can specify the ways that you want to request an attention interruption and you can identify hardware features and capabilities. The TERMINAL command allows you to request an attention interruption whether or not your terminal has a key for attention interrupt.

Note: The TERMINAL command is only for line mode type devices that are *not* in full-screen applications. Usually TERMINAL has no effect on full-screen devices such as 3270, nor does TERMINAL work if the user is in a full-screen application, such as ISPF.

Note: The TERMINAL command is not allowed as a TSO/E command in the background.

The terminal characteristics that you have defined remain in effect until you enter the LOGOFF command. If you terminate a session and begin a new one by entering a LOGON command (instead of a LOGOFF command followed by a LOGON command), the terminal characteristics defined in the earlier session remain in effect during the subsequent session.

If your session is interrupted by a line disconnection and you logon again using the LOGON RECONNECT, you must redefine all previously defined terminal characteristics. The reason for the redefinition is that all records for defined data are lost as a result of the line disconnection.

Note: If an invoked program issues the VTAM STTRAN macro that affects the same hex value that the TERMINAL command changed, then the value set by the TERMINAL command is no longer in effect.

TERMINAL Command Syntax

```
►►─┬─TERMINAL─┬─┬─NOLINES──────────┬─┬─NOSECONDS────────┬──────────────►
   └─TERM─────┘ └─LINES(integer)───┘ └─SECONDS(integer)──┘

►─┬─NOINPUT──────────┬──┬─BREAK───┬──┬─TIMEOUT───┬──────────────────────►
  └─INPUT(string)────┘  └─NOBREAK─┘  └─NOTIMEOUT─┘

                                 ┌─NOCLEAR────────┐
►─┬─LINESIZE(integer)─┬──────────┴─CLEAR(string)──┴──┬─SCRSIZE(rows,length)─┬──►
  └─────────────────────┘                             └──────────────────────┘

►─┬─TRAN(name)─┬──┬─NOCHAR──────────────────────────────────────────────┬──►◄
  └─NOTRAN─────┘  └─CHAR(──┬──────────────────────────────────────────┬──┬──┬──
```

BREAK specifies, for IBM 3767 and IBM 3770 terminals, the system can interrupt your input. For other terminals, it specifies that your terminal keyboard is to be unlocked to allow you to enter input whenever you are not receiving output from the system. The system can interrupt your input with high-priority messages. Because use of BREAK with a terminal type can result in loss of output or error, check with your installation system manager before specifying this operand.

Note: If a command processor for a display device is operating in full-screen mode, VTAM treats the device as if it were operating in NOBREAK mode. For a more detailed description, see *OS/390 TSO/E Programming Services*.

NOBREAK specifies, for IBM 3767 and IBM 3770 terminals, the system is not allowed to interrupt you (break in) with a message when you are entering data. For other terminals, it specifies that your terminal keyboard is to be unlocked only when your program or a command you have used requests input.

The default for the BREAK/NOBREAK operand is determined when your installation defines the terminal features.

TIMEOUT | NOTIMEOUT

TIMEOUT [6] specifies your terminal keyboard will lock automatically after approximately 9 to 18 seconds of no input.

NOTIMEOUT [6] specifies your terminal keyboard will not lock automatically after approximately 9 to 18 seconds of no input.

The default for the TIMEOUT/NOTIMEOUT operand is determined when your installation defines the terminal features.

LINESIZE(*integer*)
specifies the length of the line (the number of characters) that can be printed at your terminal. The integer must not exceed 255. LINESIZE is not applicable to the IBM 3270 display stations. The default values are:

- Teletype 33/35: 72 characters
- IBM 2741 Communication Terminal: 120 characters
- IBM 3767 Communication Terminal: 132 characters
- IBM 3770 Communication System: 132 characters

If LINESIZE (80) is coded with a RECFM equal to U, then the line is truncated. The byte truncated (the last byte) is reserved for an attribute character.

If you use LINESIZE to adjust the line length of an LU1 device, the line length defaults to zero.

CLEAR(*string*) | NOCLEAR

CLEAR(*string*) [6] specifies a character string, if entered as input, causes the screen of an IBM 3270 Display Station to be erased. The string must be the only input entered and cannot exceed 4 characters in length.

NOCLEAR [6] specifies that you do not want to use a sequence of characters to erase the screen of an IBM 3270 Display Station. This is the default condition.

SCRSIZE(*rows*,*length*)
specifies the screen dimensions of an IBM 3270 Display Station, an LU2 device with VTAM, and a Network Terminal Option (NTO) terminal. When you specify the SCRSIZE operand, you must use the LINESIZE operand to get continuous writing on a NTO terminal.

If you are running under Session Manager, the system ignores SCRSIZE.

rows specifies the maximum number of lines of data that can appear on the screen.

length specifies the maximum number of characters in a line of data displayed on the screen.

Standard screen sizes (in rows and length) are:

6,40
12,40
12,80
15,64
24,80
27,132
32,80
43,80

The default values for the screen sizes are determined when your installation defines the terminal features.

TRAN(*name*) | NOTRAN

TRAN(*name*) [7] specifies a load module that contains tables used to translate specific characters you type at the terminal into different characters when they are seen by TSO/E. Conversely, when these characters are sent by TSO/E to the terminal, they are retranslated. Translation of numbers and uppercase letters is not allowed.

Character translation is especially useful when you are using a correspondence keyboard and would like to type the characters: <, >, |.

They are not available on a correspondence keyboard. For example, translation tables make it possible for you to specify that when you type the characters: [,], !.

TSO/E interprets them as <, >, and |.

NOTRAN [7] specifies no character translation is to take place.

CHAR | NOCHAR

CHAR [7] specifies one or more pairs of characters, in either hexadecimal or character notation, that replace characters in the translation tables specified by TRAN(name) or in the default translation tables. When the default translate is used, all unprintable characters are set to blanks. The first character of the pair is the character typed, printed, or displayed at the

[7] Not supported with terminals that use TCAM.

terminal. The second character is the character seen by TSO. Translation of numbers and uppercase letters is not allowed. Do not select characters that might be device control characters.

NOCHAR [7] specifies all character translations previously specified by CHAR are no longer in effect.

TERMINAL Command Return Codes

Figure 1-52. TERMINAL Command Return Codes

0	Processing successful.
12	Processing unsuccessful. An error message has been issued.

TERMINAL Command Examples

Example 1

Operation: Modify the characteristics of an IBM 2741 Communication Terminal to allow operation in unlocked-keyboard mode.

Known:

- Your terminal supports the break facility. The installation has defined a default of NOBREAK for your terminal.

```
terminal break
```

Example 2

Operation: Specify character translation for certain characters not available on an IBM 3767 Communication Terminal with an EBCDIC keyboard.

Known:

- Your terminal supports the character translation facility, and you are using the default translation table or a previously specified translation table (that you specified with the TRAN operand). You now want [to stand for <,] to stand for >, and ! to stand for P.

```
terminal char((C'[',X'4C'),(C']',X'6E'),(C'!',X'FA'))
```

TEST Command

Use the TEST command to test a program, command processor, or APPC/MVS transaction program for proper execution and to locate programming errors. For APPC/MVS transaction programs, use this command to test standard transaction programs. However, you can also use this command to partially test a multi-trans type transaction program up to the point where it issues GETTRANS for the next transaction. To use the TEST command and subcommands, you should be familiar with the Assembler language and addressing conventions. Refer to the appropriate publications for information about how to code assembler programs and definitions of assembler language terminology. Also, refer to *OS/390 TSO/E Programming Guide*, for more information about using the TEST command and the TEST tutorial. For best results, the program to be tested should be written in basic Assembler language. To use the symbolic names feature of TEST, your program should have been assembled and link-edited with the TEST operands.

If the tested program attempts to LOAD, LINK, XCTL, or ATTACH another module, the module is being searched for in the following sequence: TASKLIB, STEPLIB, JOBLIB, LPA, and then LNKLST. If the module is not in any of these areas, it will not be found. To avoid this, bring the module into virtual storage by using the LOAD subcommand of TEST.

If you enter the TEST command with operands, a pseudo or automatic breakpoint is established at +0 for the problem program being invoked under TEST. Therefore, do not use the AT subcommand of TEST (AT +0).

If you use the TEST command to test inbound APPC/MVS transaction programs, the following restrictions apply:

- You should log on with a LOGON procedure that does not allocate APPC/MVS conversations. If APPC/MVS conversations exist, TEST issues message `IKJ57501I TEST END DUE TO ERROR +` with a second-level message that explains the error and then TEST terminates. You must then perform cleanup for the conversations. (To clean up the conversations, log off. When you log on again, you should ensure that any LOGON procedure command that you specified on the logon panel does not invoke a CLIST or REXX exec that allocates APPC/MVS conversations. Note that allocation of DFM data sets may cause APPC/MVS conversations to be allocated.)
- The user-level transaction program profile for the LUs that are to be used for transaction program testing must be allowed. To allow user-level transaction program profiles, the LUADD statement in PARMLIB member APPCPMxx must include the TPLEVEL(USER) keyword. Use the LU or BASELU keyword to specify the LU on which to test the transaction program. These keywords are valid only when you use the TP keyword operand on inbound APPC/MVS transaction programs. BASELU is the default. For information about transaction program profiles, see *OS/390 MVS Planning: APPC/MVS Management*.
- If your installation uses RACF and security label checking has been activated, transaction programs cannot be tested under LU=LOCAL environment. For more information about the environment for testing transaction programs, see *OS/390 MVS Programming: Writing TPs for APPC/MVS*.

See *OS/390 TSO/E Programming Guide*, for information about:

- Using the TEST command. It contains a step-by-step tutorial on how to use TEST.
- Testing an APPC/MVS transaction program.
- Addressing conventions associated with TEST.
- Restrictions on the use of symbols.
- Programming considerations and restrictions for using TEST. These include:
  - 31-bit addressing
  - Using virtual fetch services
  - Cross-memory environment
  - The vector facility.

Note: Requesting an attention interrupt while testing a password protected data set might terminate the TEST command's processing.

TEST Command Syntax

```
►►─TEST─┬─*──────────────────┬─┬──────────────┬─┬──────────────┬──────────────────►
        └─'data_set_name'────┘ └─(member)─────┘ └─'parameters'─┘
►─┬─LOAD──┬─┬─NOCP──────────────────────────────────────────────────────────────►◄
  └─OBJECT─┘ │                                                                   │
             ├─TP('tp_name')─┬─BASELU──────────┬─┬──────────┬─┬
             │               └─LU('lu_name')───┘ └─KEEPTP───┘ │
             └─CP──────────────────────────────────────────────┘
```

TEST Command Operands

'*data_set_name***'**

specifies the name of the data set containing the program to be tested. The program must be a load module that is a member of a partitioned data set (PDS), a member of an extended partitioned data set (PDSE), or it must be an object module. A data set name must be specified to test a program that is not currently active. A currently active program is one that has abnormally terminated or has been terminated by an attention interruption.

When specifying the data set name for TEST, the name should be enclosed by single quotes or the LOAD or OBJECT qualifier is added to the name specified.

***** specifies that the program to be tested resides in the standard search libraries (LPA and linklist).

(member)

if no member name for a partitioned data set or * is given, member TEMPNAME is assumed.

If TEST is specified with a data set name, or *, registers 2 through 12 are initialized to X'FFFFFFFF'. this allows you to determine which registers have been changed by the tested program.

When TEST is specified for a load module in a PDS or a program object in a PSDE, the program being tested can invoke other user programs, if they are members of the same PDS or PDSE. The services by which one member can invoke another in the same PDS or PDSE include LINK, LOAD, XCTL, and ATTACH.

CAUTION: The program to be tested should not have the name TEST or the name of any existing TSO/E service routine.

'*parameters***'**

specifies a list of parameters to be passed to the program being tested. The 'parameters' are valid only with the NOCP or TP keywords. If you specify the CP operand, the system ignores the parameters. The list must not exceed 100 characters, including delimiters.

LOAD | OBJECT

LOAD specifies the named program is either:

- a load module that has been processed by the linkage editor and is a member of a partitioned data set (PDS)

- a load module that has been processed by the DFSMS/MVS* binder service and is a member of an extended partitioned data set (PDSE).

If both LOAD and OBJECT are omitted, LOAD is the default.

OBJECT specifies the named program is an object module that has not been processed by the linkage editor or the DFSMS/MVS binder service. The program can be contained in a sequential data set or a member of a partitioned data set.

If OBJECT is specified on the TEST command, the tested program will be named TEMPNAME.

CP
specifies the named program is a command processor.

NOCP
specifies that the named program is not a command processor. If you do not specify CP, TP, or NOCP, then NOCP is the default.

TP('*tp_name***')**
specifies that the named program is an inbound APPC/MVS transaction program. *tp_name* specifies the name of the transaction program you want to test. It is case sensitive and required if you specify the TP keyword. The *tp_name* can have a length of 1 to 64 characters consisting of uppercase and lowercase letters A–Z, numerals 1–9, and 19 special characters: `.<(+&*);-/,%_>?:'=".` If *tp_name* contains an apostrophe, you must enter two successive apostrophes for each single apostrophe.

The TEST command does not recognize transaction program alias names. For example, if you specify an alias of a transaction program name, it is considered a new transaction program name.

LU('*lu_name***') | BASELU**

LU('*lu_name***')** specifies which LU is to be used. The LU keyword is valid only when the TP keyword is specified. *lu_name* specifies the LU name. The name is required if you specify LU. The name must be in uppercase and enclosed in single quotation marks.

BASELU specifies the base LU for the user address space to be used. The BASELU keyword is valid only when the TP keyword is specified. The default is BASELU if both LU and BASELU are omitted. For more information about the base LU, see *OS/390 MVS Programming: Writing TPs for APPC/MVS*.

KEEPTP
specifies that TEST should not clean up the transaction program and its conversations when TEST terminates. If you do not specify this keyword, the transaction program and its conversations are cleaned up when TEST terminates. If you specify this keyword, TEST will not clean up the transaction program and its remaining conversations.

TEST Command Return Codes

Figure 1-53. TEST Command Return Codes

0	TEST is active.
4	TEST is inactive.

TEST Command Examples

Example 1

Operation: Enter TEST mode after experiencing either an abnormal termination of your program or an attention interrupt.

Known:

- Either you have received a message saying that your foreground program has terminated abnormally, or you have pressed the attention key while your program was executing. In either case, you would like to begin debugging your program.

```
test
```

Example 2

Operation: Invoke a program for testing.

Known:

- The name of the data set that contains the program: TLC55.PAYER.LOAD(THRUST)
- The program is a load module and is not a command processor.
- The prefix in the user's profile is TLC55.
- The parameters to be passed: 2048, 80

```
test payer(thrust) '2048,80'
```

```
test payer.load(thrust) '2048,80'
```

Example 3

Operation: Invoke a program for testing.

Known:

- The name of the data set that contains the program: TLC55.PAYLOAD.OBJ
- The prefix in the user's profile is TLC55.
- The program is an object module and is not a command processor.

```
test payload object
```

Example 4

Operation: Test a command processor.

Known:

- The name of the data set containing the command processor: TLC55.CMDS.LOAD(OUTPUT)

```
test cmds(output) cp
```

or

```
test cmds.load(output) cp
```

Note: You will be prompted to enter a command for the command processor. TSO/E prompts you for the commands you want to test.

Example 5

Operation: Invoke a command processor for testing.

Known:

- The name of the data set containing the command processor is TLC55.LOAD(OUTPUT).
- The prefix in the user's profile is TLC55.

```
test (output) cp
```

Example 6

Operation: Test an APPC/MVS transaction program.

Known:

- The TLC55.APPCTP.LOAD(myprog) data set contains the load module for the transaction program to be tested.
- MAIL is the transaction program name that the inbound allocate request will try to allocate.

```
test appctp.load(myprog) tp(’MAIL’) keeptp
```

Note: Because the LU keyword is not specified, TEST uses the base LU for testing. Also, the transaction program and its remaining conversations are not cleaned up by TEST when TEST terminates because the KEEPTP word is specified. See *OS/390 TSO/E Programming Guide*, for more information on testing an APPC/MVS transaction program.

Example 7

Operation: Test an APPC/MVS transaction program with a specific LU.

Known:

- The TLC55.APPCTP.LOAD(myprog) data set contains the load module for the transaction program to be tested.
- MAIL is the transaction program name that the inbound allocate request will try to allocate.
- LUA is specified as the LU on which the transaction program is to be tested.

```
test appctp.load(myprog) tp('MAIL') lu('LUA')
```

Note: LUA is the LU used for testing. Also, the transaction program and its remaining conversations are cleaned up by TEST when TEST terminates because the KEEPTP keyword is not specified. See *OS/390 TSO/E Programming Guide*, for more information on testing an APPC/MVS transaction program.

TEST Subcommands (Overview)

The following are TSO/E commands you can use in the TEST environment:

```
ALLOCATE   EXEC       LISTALC    LISTDS     RENAME   SUBMIT
ATTRIB     HELP       LISTBC     PROFILE    SEND     TERMINAL
CANCEL     LINK       LISTCAT    PROTECT    STATUS   UNALLOC (FREE)
```

The above commands are described with the TEST subcommands in alphabetical order. For a complete description of the syntax and function of those TSO/E commands that you can use in the TEST environment, see the corresponding TSO/E command.

Use the various TEST subcommands to perform the following basic functions:

- Execute the program from its starting address or from any address within the program.
- Display selected areas of the program as they currently appear in virtual storage, or display the contents of any of the registers. With the exception that access registers cannot be specified for indirect addressing or address expressions, you can use access registers as you would general registers.
- Interrupt the program at specified locations. After you have interrupted the program, you can display areas of the program or any of the registers, or you can issue other subcommands of TEST to be executed before returning control to the program being tested.
- Change the contents of specified program locations in virtual storage or the contents of specific registers.

For a discussion on how to use these basic functions, see *OS/390 TSO/E Programming Guide*. The subcommands of the TEST command and the TSO/E commands you can use in the TEST environment are:

Figure 1-54 (Page 1 of 3). Subcommands and Functions of the TEST Command

ALLOCATE	Dynamically allocates the data sets required by a program intended for execution.
AND	Performs a logical AND operation on data in two locations, placing the results in the second location specified.
ASSIGNMENT OF VALUES(=)	Modifies values in virtual storage and in registers.
AT	Establishes breakpoints at specified locations.
ATTRIB	Builds a list of attributes for non-VSAM data sets, which are to be dynamically allocated.
CALL	Initializes registers and initiates processing of the program at a specified address using the standard subroutine linkage.
CANCEL	Halts processing of batch jobs submitted for the terminal.
COPY	Moves data.
DELETE	Deletes a load module from virtual storage.
DROP	Removes symbols established by the EQUATE command from the symbol table of the module being tested.

Figure 1-54 (Page 2 of 3). Subcommands and Functions of the TEST Command

END	Terminates all operations of the TEST command and the program being tested.
EQUATE	Adds a symbol to the symbol table and assigns attributes and a location to that symbol.
EXEC	Executes a CLIST.
FREEMAIN	Frees a specified number of bytes of virtual storage.
GETMAIN	Acquires a specified number of bytes of virtual storage for use by the program being processed.
GO	Restarts the program at the point of interruption or at a specified address.
HELP	Lists the subcommands of TEST and explains their function, syntax, and operands.
LINK	Invokes the linkage editor service program.
LIST	Displays the contents of a virtual storage area or registers.
LISTALC	Displays a list of the names of data sets allocated during the current TSO/E session.
LISTBC	Displays a listing of the contents of the broadcast data set or a user log data set, which contains messages of general interest (NOTICES) and messages directed to a particular user (MAIL).
LISTCAT	Lists catalog entries by name or entry type; lists selected fields for each entry.
LISTDCB	Lists the contents of a data control block (DCB). You must specify the address of the DCB.
LISTDEB	Lists the contents of a data extent block (DEB). You must specify the address of the DEB.
LISTDS	Displays attributes of specific data sets at the terminal.
LISTMAP	Displays a map of the user's virtual storage.
LISTPSW	Displays a program status word (PSW).
LISTTCB	Lists the contents of the current task control block (TCB). You can specify the address of another TCB.
LISTVP	Displays the partial sum number and the vector section size of a vector machine.
LISTVSR	Displays the vector status register (VSR).
LOAD	Loads a program into virtual storage for execution.
OFF	Removes breakpoints.
OR	Performs a logical OR operation on data in two locations, placing the results in the second location specified.
PROFILE	Establishes, changes, or lists the user profile.
PROTECT	Prevents unauthorized access to a non-VSAM data set.
QUALIFY	Establishes the starting or base location for resolving symbolic or relative addresses; resolves identical external symbols within a load module.
RENAME	Changes the name of a non-VSAM cataloged data set or a member of a PDS or creates an alias for a member of a PDS.
RUN	Terminates TEST and completes execution of the program.

Figure 1-54 (Page 3 of 3). Subcommands and Functions of the TEST Command	
SEND	Sends a message to another terminal user or to the system operator.
SETVSR	Sets fields in the vector status register.
STATUS	Displays status of batch jobs at terminal.
SUBMIT	Submits one or more batch jobs for processing.
TERMINAL	Defines the operating characteristics for the terminal being used.
UNALLOC	Frees data sets under TSO/E TEST. Because FREE is an alias for the FREEMAIN subcommand, use UNALLOC to free files under TEST.
WHERE	Displays the virtual address of a symbol or entry point, or the address of the next executable instruction. WHERE can also be used to display the module and CSECT name and the displacement into the CSECT corresponding to an address.

TEST—ALLOCATE Command

Use the ALLOCATE command to dynamically allocate the data sets required by a program intended for execution. For a description of the ALLOCATE command syntax and function, see the “ALLOCATE Command” on page 1-19.

TEST—AND Subcommand

Use the AND subcommand to perform a logical AND operation on data or addresses from:

- One virtual storage address to another
- One general register to another
- A general register to virtual storage
- Virtual storage to a general register
- An access register to virtual storage
- Virtual storage to an access register
- One access register to another.

The AND subcommand can be used to:

- Alter the contents of the general registers.
- AND an entire data field with another.

TEST—AND Subcommand Syntax

```
                                                          ┌─NOPOINTER─┐
►►──AND──address_1──address_2──┬──────────────────────────┬──────────┴──────►
                               │                          │           └─POINTER──┘
                               └─LENGTH(─┬─────────┬─)────┘
                                         ├─4───────┤
                                         └─integer─┘

►──┬─ARFROM(register_number)─┬──┬─ARTO(register_number)─┬──►◄
   └─ALETFROM(alet_value)────┘  └─ALETTO(alet_value)────┘
```

TEST—AND Subcommand Operands

address_1
specifies the location of data that is to be ANDed with data pointed to by *address_2*.

If you do not specify POINTER and there is a breakpoint in the data pointed to by *address_1*, the TSO/E TEST processor terminates the AND operation.

address_2
specifies the location of the data that is to be ANDed with data pointed to by *address_1*. When the AND operation is complete, the result is stored at this location.

You can specify *address_1* and *address_2* as:

- An absolute address
- A symbolic address
- A relative address
- An indirect address
- An address expression
- A module name and entry name (separated by a period)
- A general register
- An entry name (preceded by a period)
- An access register.

ARTO(*register_number***)**
specifies that the location of the data pointed to by *address_2* is in an alternate address/data space referred to by an access register. Valid access register numbers are 0 through 15. The operands ARTO and ALETTO (or ALTO) are mutually exclusive.

ARFROM(*register_number***)**
specifies that the location of the data pointed to by *address_1* is in an alternate address/data space referred to by an access register. Valid access register numbers are 0 through 15. The operands ARFROM, ALETFROM, and POINTER are mutually exclusive.

ALETTO(*alet_value***) | ALTO(***alet_value***)**
specifies that the location of the data pointed to by *address_2* is in an alternate address/data space. The ALETTO value may be from 1 to 8 hexadecimal characters. The operands ALETTO and ARTO are mutually exclusive.

ALETFROM(*alet_value***) | ALFROM(***alet_value***)**
specifies that the location of the data pointed to by *address_1* is in an alternate address/data space. The ALETFROM value may be from 1 to 8 hexadecimal characters. The operands ALETFROM, ARFROM and POINTER are mutually exclusive.

LENGTH(*integer***) | LENGTH(4)**
specifies the length, in decimal, of the field to be copied. If an integer is not specified, LENGTH defaults to 4 bytes. The maximum length is 256 bytes.

POINTER
specifies *address_1* is to be validity checked to see that it does not exceed maximum virtual storage size. *address_1* is then treated as an immediate operand (hexadecimal literal) with a maximum length of 4 bytes (that is, an address converted to its hexadecimal equivalent). When using the POINTER

operand, do not specify a general register as *address_1*. The POINTER operand and the operands ARFROM and ALETFROM are mutually exclusive.

NOPOINTER
specifies *address_1* is to be treated as an address. If neither POINTER nor NOPOINTER is specified, NOPOINTER is the default.

The AND subcommand treats the 16 general registers as contiguous fields. The user can AND 10 bytes from general register 0 to another location as follows:

```
and 0R 80060. length(10)
```

The AND subcommand ANDs the 4 bytes of register 0, the 4 bytes of register 1, and the high-order 2 bytes of register 2 to virtual storage beginning at location 80060. When a register is specified as *address_1*, the maximum length of data that is ANDed is the total length of the general registers or 64 bytes.

TEST—AND Subcommand Examples

Example 1

Operation: AND two full words of data each in a virtual storage location placing the result in the second location.

Known:

- The starting address of the data to be used as the first operand: 80680
- The starting address of the data to be used as the second operand and the location of the result: 80690

```
and 80680. 80690. length(8)
```

Example 2

Operation: AND the contents of two registers, placing the result in the second register specified.

Known:

- The register which contains the data specified as the first operand: 10
- The register which contains data specified as the second operand and the result: 5

```
and 10r 5r
```

Example 3

Operation: Turn off the high-order bit of a register.

Known:

- The AND value: X'7F'
- The register: 1

```
and 7F. 1r l(1) pointer
```

Note: Specifying the pointer operand causes 7F to be treated as an immediate operand and not as an address.

Example 4

Operation: AND the contents of an area pointed to by a register into another area.

Known:

- The register which points to the area that contains the data to be ANDed: 14
- The virtual storage location which is to contain the second operand and result: 80680
- The length of the data to be ANDed: 8 bytes

```
and 14r% 80680. l(8) nopoint
```

Example 5

Operation: AND a fullword with X'7F' into the storage where general register 3 points in the alternate address/data space referred to by the ALET 00010004.

```
and 7f. 3r? pointer aletto(00010004)
```

Assignment of Values Function of TEST

Use the assignment function to change:

- The contents of specified program locations in virtual storage
- The contents of specific registers
- The contents of storage in an alternate address/data space.

When processing is halted at a breakpoint or before execution is initiated, you can modify values in virtual storage and in registers. This function is implicit; that is, you do not enter a subcommand name. The system performs the function in response to operands that you enter.

Syntax of Values Function of TEST

```
►►─address=data_type──'value'──┬──────────────────────────────────►
                               └─,data_type──'value'──┘
►──┬──────────────────────────┬──────────────────────────────────►◄
  ├─ALET(alet_value)─────────┤
  └─AR(register_number)──────┘
```

Operands of Values Function of TEST

address

specifies the location that you want to contain a new value. You can specify *address* as:

- An absolute address
- A symbolic address
- A relative address
- An indirect address
- An address expression
- A module name and entry name (separated by a period)
- An entry name (preceded by a period)
- A general register
- A floating point register
- A vector register

- A vector register element
- An access register
- An alternate address/data space
- The vector mask register.

data_type **'***value***'[,***data_type* **'***value***',...]**
specifies the type of data and the value that you want to place in the specified location. If you want to specify more than one *data_type*, enclose the list in parentheses, for example, `(data_type 'value',data_type 'value')`. You indicate the type of data by one of the following codes:

Code	Type of Data	Maximum Length (Bytes) *	Storage Boundary
			Data types must begin on specified boundary for a virtual storage address
C	Character	One line of input, continued lines permitted	C-byte
X	Hexadecimal	64	X-byte
B	Binary	64	B-byte
H	Fixed point binary (halfword)	6	H-halfword
F	Fixed point binary (fullword)	11	F-fullword
E	Floating point (single precision)	13	E-fullword
D	Floating point (double precision)	22	D-doubleword
P	Packed decimal	32	P-byte
Z	Zoned decimal	17	Z-byte
A	Address constant	11	A-fullword
S	Address (base + displacement)	8	S-halfword
Y	Address constant (halfword)	6	Y-halfword

* All characters within the quotes are included in the length.

Following is a list of valid entries and syntax for data type:

C ‘character value’

X ‘hexadecimal value’

B ‘binary value’

H ‘[+] decimal value’

The minimum value for H-type is -32768 and the maximum value is 32767.

F ‘[+] decimal value’

The minimum value for F-type is -2147483648 and the maximum value is 2147483647.

E ‘[+] decimal value [E[+] decimal exponent]’

A maximum of eight digits is allowed for the decimal value and a maximum of two digits is allowed for the decimal exponent.

D ‘[+] decimal value [E[+] decimal exponent]’

A maximum of 17 digits is allowed for the decimal value and a maximum of two digits is allowed for the decimal exponent.

P ‘[+] decimal value’

A maximum of 31 digits is allowed.

Z ‘[+] decimal value’

A maximum of 16 digits is allowed.

A ‘[+] decimal value’

The minimum decimal value is -2147483648 and the maximum decimal value is 2147483647.

S ‘decimal value(register number)’

The decimal value can be from 0 to 4095 and the register number must be from 0 to 15 (decimal form).

Y ‘[+] decimal value’

The decimal value may be from 0 to 32767.

You include your data following the code. Your data must be enclosed within apostrophes. Any single apostrophes within your data must be coded as two single apostrophes. Character data can be entered. If necessary, all other data types will be translated into uppercase.

A list of data can be specified by enclosing the list in parentheses. The data in the list is stored at the beginning of the location specified by the address operand.

Values assigned to general registers and access registers are placed in registers right-justified and padded with binary zeroes.

When a virtual storage address is assigned a list of *data_type* values, the address must reside on the appropriate boundary for the specified *data_type* of the first value. Storage bytes for subsequent *data_type* values will be skipped to align data on the appropriate boundary for the data type requested.

If the length of the value you assign to the vector mask register is greater than the length of the vector mask register, an error message is issued. If the length of the value is shorter than the vector mask register, the value is placed in the vector mask register left-justified, and the remaining bits are unchanged.

The following restrictions apply to general registers, floating-point registers, vector registers, access registers and the vector mask register.

1. Specify only one *data_type* for floating-point registers. Additional *data_type*s are ignored.
2. Assign only X or E *data_type*s to single precision floating-point registers.
3. Assign only X, F, or E *data_type*s to single precision vector registers.
4. Assign only X or D *data_type*s to double precision floating-point registers.
5. Assign only X or D *data_type*s to double precision vector registers.
6. With the exception of the D-type of data, general registers and access registers can be assigned any *data_type*
7. Assign only X or B *data_type*s to the vector mask register.

When a general register, floating point register, vector register, or vector register element is assigned a list of *data_type*‘values’, the first value is assigned to the specified register or register element. Subsequent *data_type* values are assigned to contiguous higher-numbered registers or register elements. If register 15 is reached and *data_type* values remain, the values are wrapped around to register 0 and subsequent registers, if needed. For more information about programming

considerations for using the vector registers, see *OS/390 TSO/E Programming Guide*.

If data is assigned to a storage area that contains a breakpoint, the breakpoint is removed and a warning message is displayed at the terminal.

ALET(*alet_value***)**
specifies the alternate address/data space where you want to change storage. You can specify from 1 to 8 hexadecimal characters to represent the *alet_value*.

AR(*register_number***)**
specifies the access register that contains the alet to be used to determine where you want to change storage. Valid access register numbers are 0 through 15.

Examples of Values Function of TEST

Example 1

Operation: Insert a character string at a particular location in virtual storage.

Known:

- The address is a symbol: INPOINT
- The data: January 1, 1985

```
inpoint=c'january 1, 1985'
```

Example 2

Operation: Insert a binary number into a register.

Known:

- The number of the register: register 6
- The data: 0000 0001 0110 0011

```
6r=b'0000000101100011'
```

Example 3

Operation: Initialize registers 0 through 3 to zeroes and register 15 to 4.

```
15R=(x'4',x'0',x'0',x'0'x'0')
```

Note: The sixteen (16) general registers are treated as contiguous fields with register 0 immediately following register 15.

Example 4

Operation: Assign a new base and displacement for an instruction that was found to be in error.

Known:

- LA instruction at +30 is X'41309020'. In this instruction, the current base register is 9 and the displacement is a decimal value of 32 (hexadecimal value of 20). The base register should be 10 and the decimal displacement should be 98 (hexadecimal value of 62).

```
+32=S'98(10)'
```

After this assignment, the instruction at +30 is X'4130A062'.

Example 5

Operation: Insert a number in packed format at a particular address in virtual storage.

Known:

- Absolute address: C3D41, decimal value to be packed is -1038.

```
c3d41.=p'-1038'
```

Example 6

Operation: Set the entire contents of the vector register 1 to hexadecimal zeros.

```
1v(*)=X'00000000'
```

Example 7

Operation: Set the tenth element in vector register 1 to decimal 33.

```
1v(10)=f'33'
```

Example 8

Operation: Set elements 3 and 4 of vector register 3 to X'00' and X'02', respectively.

```
3v(3)=(X'00',X'02')
```

Example 9

Operation: Set the first element of vector registers 0 and 1 to the double precision floating point value of +33E+2.

```
0w(1)=d'+33E+2'
```

Example 10

Operation: Assign the value 100 to the four bytes at the address pointed to by register 9. The storage for addressing is in the address space referred to by the ALET value 9E00.

```
9r?=F'100'ALET(9E00)
```

Example 11

Operation: Set the contents of access register 7 to zeros.

```
7a=x'00000000'
```

Example 12

Operation: Set the vector mask register to the hexadecimal value 046C471F.

```
0M=x'46C471F'
```

TEST—AT Subcommand

Use the AT subcommand to establish breakpoints where processing is to be temporarily halted so that you can examine the results of execution up to the point of interruption. Processing is halted before the instruction at the breakpoint is executed.

If you enter the TEST command with operands, a pseudo or automatic breakpoint is established at +0 for the problem program being invoked under TEST. Therefore, do not specify AT +0.

If you set a breakpoint following a fullscreen TPUT macro and preceding a TGET macro, the fullscreen message is overlaid by the TEST line mode message (IKJ57024I). For more information, see *OS/390 TSO/E Programming Guide*.

You can also use the AT subcommand to set breakpoints at the vector instructions in the same way you use it to set breakpoints at other Assembler instructions.

You cannot establish a breakpoint at:

- The target of an execute instruction or the execute instruction itself.
- An instruction that is to be modified by the execution of other in-line code prior to the execution of the breakpoint.
- A user-written SVC exit.
- An instruction that other code depends upon to be the same. See “Example 7” on page 1-316.

Note: The PC, SAC, SACF, SSAR, PT, and PR assembler instructions are not supported by the AT subcommand of TEST.

TSO/E TEST supports a single pass breakpoint for the following instructions: BRC, BRAS, and BRCT. A single pass breakpoint will be removed automatically during execution of the GO subcommand of TSO/E TEST. After resuming execution at the breakpoint, the breakpoint will no longer be in effect until the user reestablishes it by using the AT subcommand of TSO/E TEST. If the user desires to reestablish the breakpoint, the breakpoint must be reestablished after the 'GO' subcommand has been issued.

TEST—AT Subcommand Syntax

```
►►─AT─┬─address──┬──────────┬─┬──────────────────────────────────────►
      │          └─:address─┘ │ │  ┌──────────────┐
      └─(─┬─address──┬──────┬─┘─┘  └─(─┬─subcommand─┬─)─┘
          │          └─:address─┘      │            │
          ┘ ,                          ┘            ┘

►─┬──────────────────────┬─┬─┬─NODEFER─┬─┬─┬─NOTIFY───┬─┬──────────────────────────────────►◄
  └─COUNT(integer)───────┘ │ └─DEFER───┘ │ └─NONOTIFY──┘ └─TITLE('text')──────────────────┘
                           ┘             ┘
```

TEST—AT Subcommand Operands

address
specifies a location that is to contain a breakpoint. The address must be on a halfword boundary and contain a valid op code.

address:address
specifies a range of addresses that are to contain breakpoints. Each address must be on a halfword boundary. A breakpoint is established at each instruction between the two addresses. When a range of addresses is specified, assignment of breakpoints halts when a not valid instruction is encountered.

(*address*)
specifies several addresses that are to contain breakpoints. Each address must be on a halfword boundary. The list must be enclosed within parentheses, and the addresses in the list must be separated by standard delimiters (one or more blanks or a comma). A breakpoint is established at each address.

For *address*, *address*:*address*, (*address*), specify *address* as:

- An absolute address
- A symbolic address
- A relative address
- An indirect address
- An address expression
- A module name and entry name (separated by a period)
- An entry name (preceded by a period).

subcommands
specifies one or more subcommands to be executed when the program is interrupted at the indicated location. If you specify more than one subcommand, the subcommands must be separated by semicolons. The list cannot be longer than 255 characters. **If a CLIST is executed as part of the subcommand list the results of the execution may not occur in the expected order.**

Note: If an OFF subcommand in the list removes the breakpoint for which a list is specified, all remaining subcommands in that list are ignored.

COUNT(*integer*)
specifies that processing is not to be halted at the breakpoint until it has been encountered the specified number of times. This operand is directly applicable to program loop situations where an instruction is executed several times. Processing is halted each time the breakpoint has been encountered the number of times specified for the integer operand. The integer specified cannot exceed 65,535.

NODEFER
specifies the breakpoint is to be inserted into the program now in virtual storage. This is the default value if both DEFER and NODEFER are omitted.

DEFER
specifies the breakpoint is to be established in a program that is *not yet* in virtual storage. The program to contain the breakpoint is brought in as a result of a LINK, LOAD, ATTACH, or XCTL macro instruction by the program being tested. When you specify this operand, you must qualify the address of the breakpoint:

```
MODULENAME.ENTRYNAME.RELATIVE
```

or

```
MODULENAME.ENTRYNAME.SYMBOL
```

All breakpoint addresses listed in an AT subcommand with the DEFER operand must refer to the same load module.

NOTIFY
specifies that if the breakpoint is encountered, it will be identified at the terminal. NOTIFY is the default.

NONOTIFY
specifies that if the breakpoint is encountered, it will not be identified at the terminal.

TITLE('*text*')
specifies from 1 to 50 characters of text displayed following the word AT whenever the tested program stops at the breakpoint associated with that text. The text is intended to serve as a meaningful identification of the instruction address at which the program stops. It is used instead of an address. If NONOTIFY is specified, nothing is displayed.

A list of addresses can be associated with the same text and the text is displayed whenever the associated breakpoint is reached. If a range is specified and TITLE ('*text*') is listed as an operand, the text is displayed in the form: '*text_string*' + displacement. Displacement is the hexadecimal offset at the breakpoint encountered from the beginning of the range.

Note: If your program is running in supervisor state or in a PSW protection key less than 8, breakpoints are ignored.

TEST—AT Subcommand Examples

Example 1

Operation: Establish breakpoints at each instruction in a section of the program that is being tested.

Known:

- The addresses of the first and last instructions of the section that you want to test: LOOPA EXITA
- The subcommands to be executed are: LISTPSW, GO

```
at loopa:exita (listpsw;go)
```

Example 2

Operation: Establish breakpoints at several locations in a program.

Known:

- The addresses for the breakpoints: +8A LOOPB EXITB

```
at (+8A loopb exitb)
```

Example 3

Operation: Establish a breakpoint at a location in a loop. The address of the location is contained in register 15. You only want to have an interruption every tenth cycle through the loop. When the interruption occurs, you want a meaningful identification at the breakpoint.

Known:

- The address for the breakpoint: 15R%

```
at 15r% count(10) title('entry after 10 loops')
```

Example 4

Operation: Establish a breakpoint for a program that is not presently in virtual storage.

Known:

- The name of the load module: CALCULAT
- The CSECT name: INTEREST
- The symbolic address for the breakpoint: TOTAL

```
at calculat.interest.total defer
```

Example 5

Operation: Have the following subcommands executed when the breakpoint at TAC is reached: LISTTCB PRINT(TCBS), LISTPSW, and GO CALCULAT

```
at tac (listtcb print(tcbs);listpsw;go calculat)
```

Example 6

Operation: Request that the following subcommands be executed when the breakpoint at symbol NOW is reached: LISTMAP, LISTTCB, OFF NOW, AT +32, and GO.

```
at now (listmap;listtcb;off now;at +32;go)
```

The last two subcommands will not be executed because the breakpoint (NOW) and its subcommand list will have been removed.

Example 7

Operation: Do not set a breakpoint at an instruction that other code depends upon to be unchanged.

```
                 WAIT ECB=ECBX, LONG=YES
0000  4110  C020  LA   1, ECBX    load parameter reg. 1
0004  4100  0001  LA   0, 1(0,0)  count omitted, 1 used
0008  0780        BCR  8, 0       gives an inline '80'
000A  BF08  C009  ICM  0, 8, *-1  insert into hi-byte
000E  0A01        SVC  1          link to wait routine
  ⋮
0020              ECBX  DS     F
```

In this assembler coding example, the instruction at +A causes the high-order byte of register 0 to contain an ‘80’. Inserting a breakpoint at +8 causes the instruction at +8 to replace the inline ‘80’ produced by the WAIT macro with an SVC 97.

TEST—ATTRIB Command

Use the ATTRIB command to build a list of attributes for non-VSAM data sets that are to be dynamically allocated. For a description of the ATTRIB command syntax and function, see the “ATTRIB Command” on page 1-67.

TEST—CALL Subcommand

Use the CALL subcommand to initiate processing at a specified address and to initialize registers 1, 14, and 15. You can pass parameters to the program that is to be tested.

CAUTION:
The contents of registers 1, 14, and 15 are altered by the use of the CALL subcommand. To save the contents of these registers, use the COPY subcommand of TEST (see Example 2 and Example 3 under "TEST—COPY Subcommand" on page 1-319).

The CALL subcommand of TEST places the return address of the tested program in register 14. The high-order bit of register 14 is set to reflect the addressing mode of the tested program.

TEST—CALL Subcommand Syntax

```
►►─CALL─address──┬──────────────────────────────┬──┬────┬──┬──────────────────┬──►
                 └─PARM(─┬─address─┬─)─┘          └─VL─┘  └─RETURN(address)─┘
                         ▲         │
                         └─────────┘

►──┬──────────┬──┬──────────────────────────────┬──┬──────────────────────────┬──►◄
   └─RESUME─┘  └─AMODE(─┬─SWITCH─┬─)─┘          └─ASCMODE(─┬─AR──────┬─)─┘
                        ├────────┤                          └─PRIMARY─┘
                        ├─24───┤
                        └─31───┘
```

TEST—CALL Subcommand Operands

address
specifies the address where processing is to begin. Register 15 contains this address when the program under test begins execution. You can specify *address* as:

- An absolute address
- A symbolic address
- A relative address
- An indirect address
- An address expression
- A module name and entry name (separated by a period)
- An entry name (preceded by a period).

PARM(*address***)**
specifies one or more addresses that point to data to be used by the program being tested. The list of addresses is expanded to fullwords and placed into contiguous storage. Register 1 contains the address of the start of the list. If PARM is omitted, register 1 points to a fullword that contains the address of a halfword of zeroes.

VL specifies the high-order bit of the last fullword of the list of addresses pointed to by general register 1 is to be set to one.

RETURN(*address***)**
specifies on completion of execution, the called program returns control to the address in register 14. The high-order bit of register 14 reflects the addressing mode of the tested program prior to the issuance of the CALL subcommand. If

RETURN is omitted, register 14 contains the address of a breakpoint instruction.

RESUME
specifies upon completion of execution, the called program returns control to the address of the last breakpoint prior to the CALL.

AMODE [(24 | 31 | SWITCH)]
specifies the addressing mode in which the called program begins execution. If AMODE(SWITCH) is specified, the called program continues execution in the addressing mode that is non-current when CALL is issued. You can determine the current addressing mode by issuing the LISTPSW command. If AMODE is not specified, there is no change in addressing mode.

ASCMODE(AR | PRIMARY)
specifies the PSW mode in which the called program executes. If you specify ASCMODE(PRIMARY), the PSW mode is set to execute the program using the primary address space control mode (in primary mode). When ASCMODE(AR) is specified, the PSW is set to execute the program in AR mode.

TEST—CALL Subcommand Examples

Example 1

Operation: Initiate execution of the program being tested at a particular location.

Known:

- The starting address: +0A
- The addresses of data to be passed: CTCOUNTR LOOPCNT TAX

```
call +0a parm(ctcountr loopcnt tax)
```

Note: The following message is issued after completion of the called routine:

```
'IKJ57023I PROGRAM UNDER TEST HAS TERMINATED NORMALLY+'
```

This message is then issued because no return address was specified. If GO is now specified without an address, the TEST session is terminated.

Example 2

Operation: Initiate execution at a particular location.

Known:

- The starting address: STARTBD
- The addresses of data to be passed: BDFLAGS PRFTTBL COSTTBL ERREXIT
- Set the high-order bit of the last address parameter to 1 so that the program can tell the end of the list. After execution, control is to be returned to: +24A

```
call startbd parm(bdflags prfttbl costtbl errexit)-
vl return(+24a)
```

Example 3

Operation: Initiate execution at label COMPUTE and have execution begin at label NEXT when control is returned by register 14.

```
call compute return(next)
```

TEST—CANCEL Command

Use the CANCEL command to halt processing of batch jobs submitted from the terminal. For a description of the CANCEL command syntax and function, see the “CANCEL Command” on page 1-79.

TEST—COPY Subcommand

Use the COPY subcommand to transfer data or addresses from:

- One storage address to another
- One general register to another
- A general register to virtual storage
- Virtual storage to a general register
- An access register to virtual storage
- Virtual storage to an access register
- One access register to another.

In addition, you can use the COPY subcommand to:

- Save or restore the contents of the general registers
- Propagate the value of a byte throughout a field
- Move an entire data field from one location to another

TEST—COPY Subcommand Syntax

```
►►──┬─COPY─┬──address_1──address_2──┬──────────────────────────────────────►
    └─C────┘                        └─LENGTH(─┬─4─────────┬─)─┘
                                              └─integer───┘

    ┌─NOPOINTER─┐
►───┤           ├──┬──────────────────────────────────────────────────────►
    └─POINTER───┘  ├─ARFROM(register_number)─┤
                   └─ALETFROM(alet_value)────┘

►──┬──────────────────────────────────────────────────────────────────►◄
   ├─ARTO(register_number)─┤
   └─ALETTO(alet_value)────┘
```

TEST—COPY Subcommand Operands

address_1
: specifies a location that contains data to be copied.

address_2
: specifies a location that receives the data after it is copied.

You can specify *address_1* and *address_2* as:

- An absolute address
- A symbolic address
- A relative address

- An indirect address
- An address expression
- A module name and entry name (separated by a period)
- A general register
- An access register.

ARFROM(*register_number***)**
specifies that the location of the data pointed to by *address_1* is in an alternate address/data space referred to by the specified access register. Valid access register numbers are 0 through 15. The operands ARFROM, ALETFROM, and POINTER are mutually exclusive.

ALETFROM(*alet_value***) | ALFROM(***alet_value***)**
specifies that the location of the data pointed to by *address_1* is in an alternate address/data space. The ALETFROM value may be from 1 to 8 hexadecimal characters. The operands ALETFROM, ARFROM, and POINTER are mutually exclusive.

ARTO(*register_number***)**
specifies that the location of the data pointed to by *address_2* is in an alternate address/data space referred to by an access register. Valid access register numbers are 0 through 15. The operands ARTO and ALETTO (or ALTO) are mutually exclusive.

ALETTO(*alet_value***) | ALTO(***alet_value***)**
specifies that the location of the data pointed to by *address_2* is in an alternate address/data space. The ALETTO value may be from 1 to 8 hexadecimal characters. The operands ALETTO and ARTO are mutually exclusive.

LENGTH(*integer***) | LENGTH(4)**
specifies the length, in decimal, of the field to be copied. If an integer is not specified, LENGTH defaults to 4 bytes. The maximum length is 65,535 bytes in a storage-to-storage copy operation and 64 bytes when a register is specified.

POINTER
specifies *address_1* is to be validity checked to see that it does not exceed maximum virtual storage size. *address_1* is then treated as an immediate operand (hexadecimal literal) with a maximum length of 4 bytes (that is, an address will be converted to its hexadecimal equivalent) and transferred into the location specified by *address_2*. When using the POINTER operand, do not specify a general register as *address_1*. POINTER and the operands ARFROM and ALETFROM are mutually exclusive.

NOPOINTER
specifies *address_1* is to be treated as an address, not as an immediate operand. NOPOINTER is the default.

The COPY subcommand treats the 16 general registers as contiguous fields. You can specify that 10 bytes be moved from general register 0 to another location.

```
copy 0r 80060. length(10)
```

The COPY subcommand moves the 4 bytes of register 0, the 4 bytes of register 1, and the high-order 2 bytes of register 2 to virtual storage beginning at location 80060. When a register is specified as *address_1*, the maximum length of data transferred is the total length of the general registers or 64 bytes.

When the value of *address_2* is one greater than *address_1*, propagation of the data in *address_1* occurs. When the value of *address_2* is more than one greater than the value of *address_1*, no propagation occurs.

TEST—COPY Subcommand Examples

Example 1

Operation: Transfer two full words of data from one virtual storage location to another.

Known:

- The starting address of the data: 80680
- The starting address of where the data is to be: 80685

```
copy 80680. 80685. length(8)
```

Example 2

Operation: Copy the contents of one register into another register.

Known:

- The register which contains the data to be copied: 10
- The register which contains the data to be received: 5

```
copy 10r 5r
```

Example 3

Operation: Save the contents of the general registers.

Known:

- The first register to be saved: 0
- The starting address of the save area: A0200

```
c 0r a0200. l(64)
```

Example 4

Operation: Propagate the value in the first byte of a buffer throughout the buffer.

Known:

- The starting address of the buffer: 80680
- The length of the buffer: 80 bytes

```
c 80680. 80681. l(79)
```

Example 5

Operation: Insert a hexadecimal value into the high-order byte of a register.

Known:

- The desired value: X'80'
- The register: 1

```
copy 80. 1r l(1) pointer
```

Note: Specifying the pointer operand causes 80 to be treated as an immediate operand and not as an address.

Example 6

Operation: Insert the entry point of a routine into a virtual storage location.

Known:

- The module name and the entry_point name: IEFBR14.IEFBR14
- The desired virtual storage location: STARTPTR

```
c iefbr14.iefbr14 startptr p
```

Example 7

Operation: Copy the contents of an area pointed to by a register into another area.

Known:

- The register which points to the area that contains the data to be moved: 14
- The real storage location which is to contain the data: 80680
- The length of the data to be moved: 8 bytes

```
c 14r% 80680. l(8) nopoint
```

Example 8

Operation: Copy the 72 bytes where register 13 points in the primary address space to location 1000 in the address space referred to by access register 5.

```
copy 13r? 1000.  arto(5) length(72)
```

TEST—DELETE Subcommand

Use the DELETE subcommand to delete, from virtual storage, a load module that was loaded by the tested program, or by one of its subtasks.

Use the DELETE subcommand to delete a module that was loaded above or below 16MB by the tested program or by the LOAD subcommand of TEST.

TEST—DELETE Subcommand Syntax

```
►►──┬─DELETE─┬──load_module_name──────────────────────────────────►◄
    └─DEL────┘
```

TEST—DELETE Subcommand Operand

load_module_name
: specifies the name of the load module to be deleted. The load name is the name (which might be an alias) by which the program is known to the system when it is in virtual storage. The name must not exceed 8 characters.

TEST—DELETE Subcommand Examples

Example 1

Operation: Delete a load module from virtual storage.

Known:

- The name of the load module: TOTAL

```
delete total
```

or

```
del total
```

TEST—DROP Subcommand

Use the DROP subcommand to remove symbols from the symbol table of the module being tested. You can only remove symbols that you established with the EQUATE subcommand or the EQUATE operand of the GETMAIN subcommand. You cannot remove symbols that were established by the linkage editor. If the program being tested was assembled with the TEST option and the EQUATE subcommand was used to override the location and type of the symbol within the program, then when the DROP subcommand is used to delete that symbol from the symbol table, the symbol will reflect the original location and type within the program.

TEST—DROP Subcommand Syntax

```
►►─DROP──┬──────────────────────────────────────────────────────────────►◄
         └─(─┬─symbol─┬─)─┘
             └────────┘
```

TEST—DROP Subcommand Operand

(*symbol*)

specifies one or more symbols that you want to remove from the symbol table created by the EQUATE subcommand or the EQUATE operand of the GETMAIN subcommand. When you specify only one symbol, you do not have to enclose the symbol within parentheses. However, two or more symbols must be enclosed by parentheses. If you do not specify any symbols, the entire table of symbols is removed.

TEST—DROP Subcommand Examples

Example 1

Operation: Remove all symbols that you have established with the EQUATE subcommand.

```
drop
```

Example 2

Operation: Remove a symbol from the symbol table.

Known:

- The name of the symbol: DATE

```
drop date
```

Example 3

Operation: Remove several symbols from the symbol table.

Known:

- The names of the symbols: STARTADD TOTAL WRITESUM

```
drop (startadd total writesum)
```

TEST—END Subcommand

Use the END subcommand to terminate all functions of the TEST command and the program being tested.

TEST—END Subcommand Syntax

```
►►──END──────────────────────────────────────────────────────────────────►◄
```

The END subcommand does not close an opened data set. Use the GO subcommand to close an opened data set. Normal exit cleanup procedures should also be used.

TEST—EQUATE Subcommand

Use the EQUATE subcommand to add a symbol to the symbol table of the module being tested. This subcommand allows you to establish a new symbol that you can use to refer to an address or override an existing symbol to reflect a new address or new attributes. If no symbol table exists, one is created and the specified name is added to it. A symbol within DSECT can be accessed if the DSECT name is defined using the EQUATE subcommand. You can also modify the data attributes (type, length, and multiplicity); use the EQUATE subcommand to modify attributes of existing equated symbols. The DROP subcommand removes symbols added by the EQUATE subcommand. Symbols established by the EQUATE subcommand are defined for the duration of the TEST session only.

TEST—EQUATE Subcommand Syntax

```
►►──┬─EQUATE─┬──symbol──address──┬──────────┬──┬──────────────────────────┬──►
    └─EQ─────┘                   └─data_type─┘  ├─ALET(alet_value)─────────┤
                                                  └─AR(register_number)─────┘

►──┬──────────────────────────┬──┬──────────────────────────────────────────►◄
   └─LENGTH(integer)──────────┘  └─MULTIPLE(integer)──────────────────────┘
```

TEST—EQUATE Subcommand Operands

symbol
: specifies the symbol (name) that you want to add to the symbol table so that you can refer to an address symbolically. The symbol must consist of 1 to 8 alphanumeric characters, the first of which is an alphabetic character.

address
: specifies the address is to equate to the symbol that you specified. You can specify *address* as:

- An absolute address
- A symbolic address
- A relative address
- An indirect address
- An address expression
- A module name and entry name (separated by a period)

- An entry name (preceded by a period).

data_type
specifies the characteristics you want to attribute to the data at the location given by address. These might be the same as the original characteristics. Indicate the type of data by one of the following codes:

Code	Type of Data	Maximum Length (Bytes)
C	Character	256
X	Hexadecimal	256
B	Binary	256
I	Assembler instruction	256
H	Fixed point binary (halfword)	8
F	Fixed point binary (fullword)	8
E	Floating point (single precision)	8
D	Floating point (double precision)	8
P	Packed decimal	16
Z	Zoned decimal	16
A	Address constant	4
S	Address (base + displacement)	2
Y	Address constant (halfword)	2

ALET(*alet_value***)**
specifies the alternate address/data space that the EQUATEd variable can reference. You can specify from 1 to 8 hexadecimal characters to represent the *alet_value*.

AR(*register_number***)**
specifies the access register that contains the alet used to determine the alternate address/data space that the EQUATEd variable can reference. Valid access register numbers are 0 through 15.

LENGTH(*integer***)**
specifies the length of the data. The maximum value of the integer is 256. If you do not specify the length, the following default values apply:

Type of Data	Default Length (Bytes)
C,B,P,Z	1
H,S,Y	2
F,E,A,X	4
D	8
I	variable

MULTIPLE(*integer***)**
specifies a multiplicity factor. The multiplicity factor means that one element of the data appears several times in succession. The number of repetitions is indicated by the number specified for integer. The maximum value of the integer is 256.

If you do not specify any operands, the defaults are:

```
type - X
multiplicity - 1
length - 4
```

If both multiplicity and length are specified for *data_type* I, the multiplicity is ignored.

TEST—EQUATE Subcommand Examples

Example 1

Operation: Add a symbolic address to the symbol table of the module that you are testing.

Known:

- The symbol: EXITRTN
- The address: TOTAL+4

```
equate exitrtn total+4
```

Example 2

Operation: Change the address and attributes for an existing symbol.

Known:

- The symbol: CONSTANT
- The new address: 1FAA0
- The new attributes: type: C, length: L(8), multiplicity: M(2)

```
eq constant 1faa0. c m(2) l(8)
```

Example 3

Operation: Add the symbol NAMES to the symbol table to access a list of 6 names. Each name is 8 characters long.

Known:

- The names are stored one after the other at relative address +12C.

```
equate names +12c 1(8) m(6) c
```

Example 4

Operation: Add SYMBOL1 to the symbol table. SYMBOL1 represents the location 3000 in the address/data space referred to via ALET 00010003.

```
equate symbol1  3000.  alet(00010003)
```

TEST—EXEC Command

Use the EXEC command to execute a CLIST or REXX exec. For a description of the EXEC command syntax and function, see the “EXEC Command” on page 1-142.

Specify only REXX statements in the REXX exec. Specify only TEST subcommands and CLIST statements in the CLIST. You cannot specify TSO/E commands in the CLIST or REXX exec until you specify END or RUN to terminate TEST.

TEST—FREEMAIN Subcommand

Use the FREEMAIN subcommand to free a specified number of bytes of virtual storage.

TEST—FREEMAIN Subcommand Syntax

```
►►──┬─FREEMAIN─┬──integer──address──┬──────────────────────────┬──────►◄
    └─FREE─────┘                    └─SP(──┬─0─────────┬──)──┘
                                           └─integer───┘
```

TEST—FREEMAIN Subcommand Operands

integer
specifies the number of decimal bytes of virtual storage to be released.

address
specifies the location of the space to be freed. It must be a multiple of 8 bytes.

Use the LISTMAP subcommand to help locate previously acquired virtual storage.

You can specify *address* as:

- An absolute address
- A symbolic address
- A relative address
- An indirect address
- An address expression
- A module name and entry name (separated by a period)
- An entry name (preceded by a period).

SP(*integer*) | SP(0)
specifies the number of the subpool that contains the space to be freed. If you omit this operand, the default value is subpool zero. The integer must be in the range 0 through 127.

TEST—FREEMAIN Subcommand Examples

Example 1

Operation: Free space in virtual storage that was previously acquired by a GETMAIN macro instruction in the module being tested.

Known:

- The size of the space, in bytes: 500
- The absolute address of the space: 054A20
- The number of the subpool that the space was acquired from: 3

```
free 500 054a20. sp(3)
```

Example 2

Operation: Free space in virtual storage that was previously obtained by a GETMAIN subcommand.

Known:

- The size of the space: 100 decimal bytes
- The address of the space to be freed: X'A4' past the address in register 3
- The space to be freed: in subpool 0

```
freemain 100 3r%+A4
```

Example 3

Operation: Free subpool 127.

```
freemain 0 0. sp(127)
```

Attention: Do not attempt to free all of subpool 78. If you want to free a portion of subpool 78, be careful not to free the storage obtained by the TMP. This results in freeing the TMP's data areas because subpool 78 is shared. The deletion of the TMP portion of subpool 78 causes your session to terminate.

You can release an entire subpool by specifying a length of 0, an absolute address of 0, and a subpool in the range 1-127.

If you specify a non-zero address, the length must also be non-zero.

TEST—GETMAIN Subcommand

Use the GETMAIN subcommand to obtain a specified number of bytes of virtual storage. The GETMAIN subcommand displays the starting address of the virtual storage obtained.

TEST—GETMAIN Subcommand Syntax

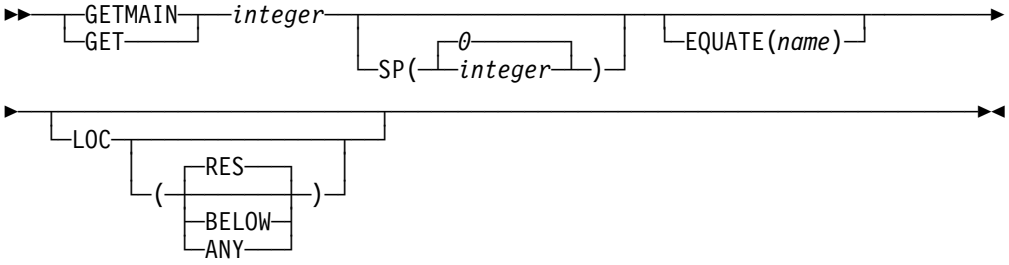

TEST—GETMAIN Subcommand Operands

integer
: specifies the number of bytes, in decimal form, of virtual storage to be obtained.

SP(*integer*) | SP(0)
: specifies the number of a subpool from which the virtual storage is to be obtained. If you omit this operand, the default value is subpool zero. The integer must be in the range 0 through 127.

EQUATE(*name*)
specifies the address of acquired virtual storage is to be equated to the symbol specified by name and placed in the TEST internal symbol table.

LOC(BELOW)
specifies the virtual and real storage area must be below 16 MB.

LOC(ANY)
specifies the virtual storage area can be anywhere in the virtual storage addressing range. The actual location (above or below 16 MB) of the virtual storage area depends on the subpool specified. If the requested subpool is supported above 16 MB, GETMAIN allocates virtual storage above 16 MB, if possible.

LOC(RES)
specifies the address of the virtual storage area depends upon the residence of the next instruction to be executed. If the instruction address in the PSW for the tested program is below 16 MB, the request is processed as LOC(BELOW). If the instruction address is above 16 MB, the request is processed as LOC(ANY). LOC(RES) is the default.

TEST—GETMAIN Subcommand Examples

Example 1

Operation: Obtain 240 decimal bytes of virtual storage from subpool 0.

```
getmain 240
```

Example 2

Operation: Obtain 500 bytes of virtual storage from subpool 3 and equate starting address to symbolic name AREA.

```
get 500 sp(3) equate(area)
```

TEST—GO Subcommand

Use the GO subcommand to start or restart program execution from a particular address. If the program was interrupted for a breakpoint and you want to continue from the breakpoint, there is no need to specify the address. However, you can start execution at any point by specifying the address.

TSO/E TEST supports a single pass breakpoint for the following instructions: BRC, BRAS, and BRCT. A single pass breakpoint will be removed automatically during execution of the GO subcommand of TSO/E TEST. After resuming execution at the breakpoint, the breakpoint will no longer be in effect until the user reestablishes it by using the AT subcommand of TSO/E TEST. If the user desires to reestablish the breakpoint, the breakpoint must be reestablished after the 'GO' subcommand has been issued.

TEST—GO Subcommand Syntax

```
►►─GO─┬──────────┬─┬─────────────────────────────────────────────►
      └─address──┘ └─AMODE─┬──────────────────────┬──┘
                           └─(─┬─SWITCH─┬─)──┘
                               ├─24─────┤
                               └─31─────┘

►─┬──────────────────────────────────────────────────────────────►◄
  └─ASCMODE(─┬─AR──────┬─)─┘
             └─PRIMARY─┘
```

TEST—GO Subcommand Operands

address

specifies the address where processing is to begin. You can specify *address* as:

- A symbolic address
- A relative address
- An absolute address
- An address expression
- A module name and entry name (separated by a period)
- An entry name (preceded by a period).

When the problem program completes processing, the following message is displayed at the terminal:

```
IKJ57023I PROGRAM UNDER TEST HAS TERMINATED NORMALLY+
```

If you now issue the GO subcommand without specifying an address, the TEST session is terminated.

AMODE [(24 | 31 | SWITCH)]

specifies the addressing mode in which program execution resumes after the GO subcommand has been issued. You can specify AMODE without specifying an address. However, if the word AMODE or any abbreviation of the word AMODE is defined as a symbolic address, GO AMODE executes as follows: program execution starts at the last breakpoint and the SWITCH default is taken.

If you do not specify AMODE, there is no change in addressing mode.

ASCMODE(AR | PRIMARY)

specifies the PSW mode in which the program executes after the GO command is issued. If you specify ASCMODE(PRIMARY), the PSW is set to execute the program using the primary address space control mode (in primary mode). Specifying ASCMODE(AR) sets the PSW to execute the program in AR mode.

TEST—GO Subcommand Examples

Example 1

Operation: Begin execution of a program at the point where the last interruption occurred or initiate execution of a program.

```
go
```

Example 2

Operation: Begin execution at a particular address.

```
go calculat
```

TEST—HELP Command

Use the HELP command to obtain the syntax and function of the TEST subcommands. For a description of the HELP command syntax and function, see the “HELP Command” on page 1-167.

TEST—LINK Command

Use the LINK command to invoke the linkage editor service program. For the description of the LINK command syntax and function, see the “LINK Command” on page 1-172.

TEST—LIST Subcommand

Use the LIST subcommand to display at your terminal or place in a data set the following:

- The contents of a specified area of virtual storage
- The contents of registers or vector registers
- The contents of access registers
- Data in alternate address/data spaces that is referred to via an access register
- The vector mask register.

TEST—LIST Subcommand Syntax

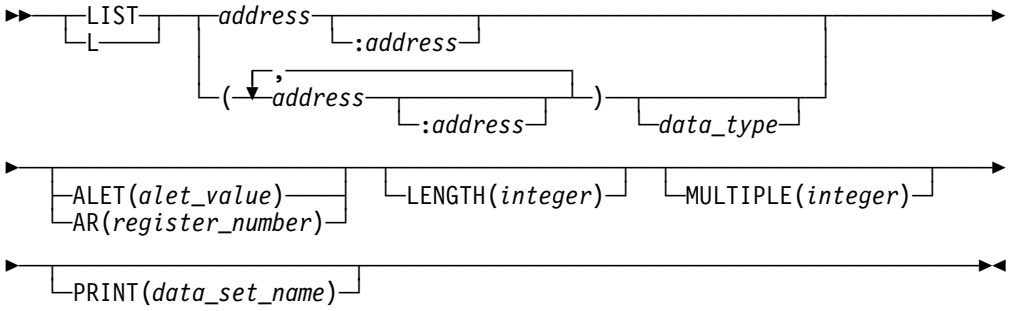

TEST—LIST Subcommand Operands

address

specifies the location of data that you want displayed at your terminal or placed into a data set.

address:*address*
specifies that you want the data located between the specified addresses displayed at your terminal or placed into a data set.

(*address***)**
specifies several addresses of data that you want displayed at your terminal or placed into a data set. The data at each location is retrieved. If the first address of a range is a register, the second address must also be the same type of register (floating-point, general, or vector). The list of addresses must be enclosed within parentheses, and the addresses must be separated by standard delimiters (one or more blanks or a comma).

If a range of addresses is specified on LIST and the ending address is in fetch protected storage, you are prompted (if in PROMPT mode) to reenter the address. If you want a range of addresses, you must reenter the range, not just the ending address.

You can create a load module that contains more than one DSECT or CSECT within the same symbolic name. When you list an unqualified symbolic address in a load module, the LIST command displays the area associated with the first occurrence of the symbol. Use the fully-qualified name, 'module_name.csect.symbol_name', to display occurrences other than the first.

For *address*, *address*:*address*, (*address*), specify *address* as:

- An absolute address
- A symbolic address
- A relative address
- An indirect address
- An address expression
- A module name and entry name (separated by a period)
- An entry name (preceded by a period)
- A general register
- A floating-point register
- A vector register
- A vector register element
- An access register
- The vector mask register.

data_type
specifies the type of data that is in the specified location. Indicate the type of data using one of the following codes:

Code	Type of Data	Maximum Length (Bytes)
C	Character	256
X	Hexadecimal	256
B	Binary	256
I	Assembler instruction	256
H	Fixed point binary (halfword)	8
F	Fixed point binary (fullword)	8
E	Floating point (single precision)	8
D	Floating point (double precision)	8
P	Packed decimal	16
Z	Zoned decimal	16
A	Address constant	4
S	Address (base + displacement)	2
Y	Address constant (halfword)	2
XC	Hexadecimal and EBCDIC	256

All accepted *data_type*s allow the specified address to be aligned on a byte boundary even though certain *data_type*s cannot be assigned to a byte boundary. The default for *data_type* is hexadecimal.

The XC *data_type* indicates that you want to display, side-by-side, the hexadecimal and EBCDIC contents of storage. The contents are displayed in hexadecimal first, followed by EBCDIC.

A general register is displayed in decimal format if the F *data_type* is used. Otherwise, regardless of the type specified, a general register is displayed in hexadecimal. Floating-point registers are listed in floating-point format if *data_type* is not specified. However, floating-point registers can be listed in hexadecimal format by using the X *data_type*. If any *data_type* other than D, E, or X is specified for floating-point registers, *data_type* is ignored and the register is listed in floating-point format.

For vector registers, if you do not specify the *data_type*, then LIST displays them in floating-point format. You can display vector registers in hexadecimal for both single (V) and double (W) precision registers. You can also display single precision (V) registers in fixed-point binary. If you specify another data type, LIST ignores it. For more information about programming considerations for using the Vector facility, see *OS/390 TSO/E Programming Guide*.

Specify 0m to display the vector mask register. It can be displayed in hexadecimal or binary format.

Access registers (A) are displayed in decimal if you specify the F *data_type*. Otherwise, they are displayed in the default *data_type*, hexadecimal.

If an area is to be displayed using the I *data_type* and the area contains a not valid op code, only the area up to that not valid op code is displayed.

ALET(*alet_value***)**
specifies that the contents of storage in an alternate address/data space are to be displayed. You can specify from 1 to 8 hexadecimal characters to represent the *alet_value*.

The *alet_value* used to reference storage appears at the far right of the display of storage. If you display storage in the primary address space, the *alet_value* is zeros. If you display storage in an alternate address/data space, the *alet_value* is the hexadecimal value you specified. ALET and AR are mutually exclusive.

Note: The *alet_value* is displayed whenever storage is listed, not only when you specify the ALET or AR keywords.

AR(*register_number***)**
specifies the access register number used to reference data in an alternate address/data space. Valid register numbers for AR are 0 through 15.

The *alet_value* in the access register used to reference storage appears at the far right of the display of storage. If you display storage in the primary address space, the *alet_value* is zeros. If you display storage in an alternate address/data space, the *alet_value* is the hexadecimal value of the data in the access register. AR and ALET are mutually exclusive.

Note: The *alet_value* is displayed whenever storage is listed, not only when you specify the AR or ALET keywords.

LENGTH(*integer*)
indicates the length, in bytes, of the data that is to be listed. If you use a symbolic address and do not specify LENGTH, the value for the LENGTH operand is retrieved from the internal TEST symbol table or from the length associated with a symbol in a program. Otherwise, the following default values apply:

Type of Data	Default Length (Bytes)
C,B,P,Z	1
H,S,Y	2
F,E,A,X	4
D	8
I	variable
XC	4

When the *data_type* is I, either LENGTH or MULTIPLE can be specified, but not both. If both are specified, the MULTIPLE operand is ignored, but no error message is printed.

MULTIPLE(*integer*)
Use with the LENGTH operand. It gives you the following options:

- The ability to format the data to be listed (see “Example 8” on page 1-336).
- A way of printing more than 256 bytes at a time. The value you specify for the integer determines how many lengths or multiples of *data_type* you want listed. The value supplied for the integer cannot exceed 256.

For I type data, the value supplied for MULTIPLE defines the number of instructions to be displayed. If you use a symbolic address and do not specify either LENGTH or MULTIPLE, the length retrieved from the internal TEST symbol table or from the program is used and multiplicity is ignored.

PRINT(*data_set_name*)
specifies the name of a sequential data set to which the data is directed. If you omit this operand, the data is directed to your terminal.

The data format is blocked variable-length records. Old data sets with the standard format and block size are treated as NEW, if they are being opened for the first time. Otherwise, they are treated as MOD data sets.

If PRINT(*data_set_name*) is specified, use the following table to determine the format of the output.

If the *data_set_name* is not specified within quotes, the descriptive qualifier TESTLIST is added.

If your record type was:	**Fixed, Fixed Blocked, or Undefined**		**Variable or Variable-Blocked**	
Then it is changed to variable-blocked with the following attributes:	Recordsize 125	Blocksize 1629	Recordsize 125	Blocksize 129

Record and block sizes greater than those specified in the preceding table are unchanged.

The specified data set is kept open until:

- The TEST session is ended by a RUN or END subcommand, or

- A LIST, LISTDCB, LISTDEB, LISTMAP, LISTPSW, LISTTCB, or LISTVSR subcommand is entered specifying a different PRINT data set. In this case, the previous data set is closed and the current one is opened.

Notice that “P” is not a valid truncation for the PRINT operand on the LIST subcommand because the single letter “P” may be used as a *data_type* specifying that the data to be listed is in packed decimal format. See also “Example 6”.

TEST—LIST Subcommand Examples

Example 1

Operation: List the contents of floating-point register 2 in single precision.

```
list  2e
```

Example 2

Operation: List all of the general registers.

```
list  0r:15r
```

Example 3

Operation: List all of the floating-point registers in double precision.

```
list  0d:6d
```

Example 4

Operation: List 20 instructions starting with address +3A

```
list +3a i m(20)
```

Example 5

Operation: List the contents of an area of virtual storage.

Known:

- The area to be displayed is between labels COUNTERA and DTABLE.
- The data is to be listed in character format for a length of 130 bytes.
- The name of the data set where the data is to be put: MYDATA.DCDUMP.

```
list countera:dtable
c l(130) m(1) print ('mydata.dcdump')
```

Example 6

Operation: List the contents of two words of storage containing packed decimal numbers, and place the output into a print data set.

Known:

- The area to be displayed starting at X'22FF4' contains two words in packed decimal format. Each packed decimal number is of a length of four bytes.
- The name of the data set where the listed data is to be placed is MYDATA.DCDUMP.
- Assume the hexadecimal contents at address X'22FF4' is X'0000135C', and the hexadecimal contents at X'22FF8' is X'0032767D'.

```
list 22FF4. p m(2) len(4) print('mydata.dcdump')
```

The following two lines where written to the print data set MYDATA.DCDUMP:

```
00022FF4.  +135
00022FF8.  -32767
```

Example 7

Operation: List the contents of virtual storage at several addresses.

Known:

- The addresses: TOTAL1, TOTAL2, TOTAL3, and ALLTOTAL
- Each address is to be displayed in fixed-point binary format in three lines of 3 bytes each.

```
list (total1 total2 total3 alltotal) f l(3) m(3)
```

Example 8

Operation: List the first six fullwords in the communications vector table (CVT).

Known:

- The absolute address of the CVT: 10
- The user is operating in TEST mode.
- The data is to be listed in hexadecimal form in six lines of 4 bytes each.

Note: First use the QUALIFY subcommand of TEST to establish the beginning of the CVT as a base location for displacement values.

```
qualify 10.%
```

- TEST: The system response

```
list +0 l(4) m(6)
```

The display at your terminal might resemble the following:

```
+0   00000000
+4   00012A34
+8   00000B2C
+C   00000000
+10  001A0408
+14  00004430
```

Example 9

Operation: Display the entire contents of vector register 1 in hexadecimal.

```
list 1v(*) x
```

Example 10

Operation: Display the fourth element of vector register 1 in fullword fixed point binary.

```
list 1v(4) f
```

Example 11

Operation: Display elements 3 through 20 of vector register 3 in single precision floating point.

```
list 3v(3):3v(20)
```

Example 12

Operation: Display the entire contents of all 16 vector registers in single precision floating point.

```
list 0v(*):15v(*)
```

Example 13

Operation: Display the entire contents of vector register 0 in double precision floating point.

```
list 0w(*)
```

Example 14

Operation: Display elements 5 to 25 of vector register 2 in double precision floating point.

```
list 2w(5):2w(25)
```

Example 15

Operation: List the contents of storage at address 4AD8 in the address/data space referred to by access register 4.

```
list 4ad8.  ar(4)
```

Example 16

Operation: List the contents of storage at the location pointed to by general register 2 in the address/data space referred to by access register 8.

```
list 2r?  ar(8)
```

Example 17

Operation: List in decimal the contents of storage at the location pointed to by the contents of the storage pointed to by register 5. The storage for all addressing is in the address/data space referred to by access register 6.

```
list 5r??  ar(6) f
```

Example 18

Operation: List the contents of storage at location 100 in the address/data space referred to by the ALET value 00010003.

```
list 100.  alet(00010003)
```

TEST—LISTALC Command

Use the LISTALC command to obtain a list of names of the data sets allocated during the current user session. For a description of the LISTALC command syntax and function, see the “LISTALC Command” on page 1-183.

TEST—LISTBC Command

Use the LISTBC command to obtain a listing of the contents of the broadcast data set or the user log data set. It contains messages of general interest (NOTICES) and messages directed to particular users (MAIL).

For a description of the LISTBC command syntax and function, see the “LISTBC Command” on page 1-187.

TEST—LISTCAT Command

Use the LISTCAT command to list catalog entries by name of entry type and selected fields for each entry. For a description of the LISTCAT command syntax and function, see the “LISTCAT Command” on page 1-189.

TEST—LISTDCB Subcommand

Use the LISTDCB subcommand to list the contents of a data control block (DCB). You must provide the address of the beginning of the DCB.

You can display the selected fields. The field identification is based on the sequential access method DCB for direct access. Fifty-two bytes of data are displayed if the data set is closed. Forty-nine bytes of data are displayed if the data set is opened.

TEST—LISTDCB Subcommand Syntax

```
►►─LISTDCB─address──────────────────────────────────────────►
►──┬──────────────────────────────────────────────────────────┬──►◄
  │                                                          │
  │                  ┌──────────────────────────────┐        │
  │                  ↓                              │        │
  └─FIELD(──┬─name──┬──)──┘        └─PRINT(data_set_name)──┘
            └───────┘
```

TEST—LISTDCB Subcommand Operands

address
specifies the address of the DCB that you want displayed. The address must be on a fullword boundary. You can specify *address* as:

- An absolute address
- A symbolic address
- A relative address
- An indirect address
- An address expression
- A module name and entry name (separated by a period)
- An entry name (preceded by a period).

FIELD(*name*)
specifies one or more names of the particular fields in the DCB that you want to display at your terminal. The segment name is not printed when you use this operand. If you omit this operand, the entire DCB is displayed.

PRINT(*data_set_name***)**
specifies the name of a sequential data set to which the data is directed. If you omit this operand, the data is directed to your terminal.

The data format is blocked variable-length records. Old data sets with the standard format and block size are treated as NEW, if they are being opened for the first time. Otherwise, they are treated as MOD data sets.

If PRINT(*data_set_name*) is specified, use the following table to determine the format of the output.

If the *data_set_name* is not specified within quotes, the descriptive qualifier TESTLIST is added.

If your record type was:	**Fixed, Fixed Blocked, or Undefined**		**Variable or Variable-Blocked**	
Then it is changed to variable-blocked with the following attributes:	Recordsize 125	Blocksize 1629	Recordsize 125	Blocksize 129

Record and block sizes greater than those specified in the preceding table are unchanged.

The specified data set is kept open until:

- The TEST session is ended by a RUN or END subcommand, or
- A LIST, LISTDCB, LISTDEB, LISTMAP, LISTPSW, LISTTCB, or LISTVSR subcommand is entered specifying a different PRINT data set. In this case, the previous data set is closed and the current one is opened.

TEST—LISTDCB Subcommand Examples

Example 1
Operation: List the RECFM field of a DCB for the program that is being tested.

Known:

- The DCB begins at location: DCBIN

```
listdcb dcbin field(dcbrecfm)
```

Example 2
Operation: List an entire DCB.

Known:

- The absolute address of the DCB: A33B4

```
listdcb a33b4.
```

TEST—LISTDEB Subcommand

Use the LISTDEB subcommand to list the contents of a data extent block (DEB). You must provide the address of the DEB.

If a copy of the control block is in extended virtual storage, the LISTDEB subcommand accepts addresses greater than 16 MB, even though the block itself

will always be in virtual storage below 16 MB. Even if an absolute address has been specified, LISTDEB displays the virtual address before formatting the control block.

In addition to the 32 byte basic section of the DEB, you can receive up to 16 direct access device dependent sections of 16 bytes each, until the full length has been displayed. If you want, you can have only selected fields displayed.

TEST—LISTDEB Subcommand Syntax

```
►►─LISTDEB─address─┬──────────────────────────┬─┬──────────────────────────┬──►◄
                   └─FIELD(─┬─name─┬─)─┘   └─PRINT(data_set_name)─┘
                            ◄──────┘
```

TEST—LISTDEB Subcommand Operands

address

specifies the address is the beginning of the DEB. It must be on a fullword boundary. You can specify *address* as:

- An absolute address
- A symbolic address
- A relative address
- An indirect address
- An address expression
- A module name and entry name (separated by a period)
- An entry name (preceded by a period).

FIELD(*name***)**

specifies one or more names of the particular fields in the DEB that you want to display at your terminal. If you omit this operand, the entire DEB is listed.

PRINT(*data_set_name***)**

specifies the name of a sequential data set to which the data is directed. If you omit this operand, the data is directed to your terminal.

The data format is blocked variable-length records. Old data sets with the standard format and block size are treated as NEW, if they are being opened for the first time. Otherwise, they are treated as MOD data sets.

If PRINT(*data_set_name*) is specified, use the following table to determine the format of the output.

If the *data_set_name* is not specified within quotes, the descriptive qualifier TESTLIST is added.

If your record type was:	**Fixed, Fixed Blocked, or Undefined**		**Variable or Variable-Blocked**	
Then it is changed to variable-blocked with the following attributes:	Recordsize 125	Blocksize 1629	Recordsize 125	Blocksize 129

Record and block sizes greater than those specified in the preceding table are unchanged.

The specified data set is kept open until:

- The TEST session is ended by a RUN or END subcommand, or

- A LIST, LISTDCB, LISTDEB, LISTMAP, LISTPSW, LISTTCB, or LISTVSR subcommand is entered specifying a different PRINT data set. In this case, the previous data set is closed and the current one is opened.

TEST—LISTDEB Subcommand Examples

Example 1

Operation: List the entire DEB for the DCB that is named DCBIN.

Known:

- The address of the DEB is 44 decimal (2C hexadecimal) bytes past the beginning of the DCB.
- The address of the DEB: DCBIN+2C%

```
listdeb dcbin+2c%
```

Example 2

Operation: List the following fields in the DEB: DEBDCBAD and DEBOFLGS

Known:

- The address of the DEB is 44 decimal (2C hexadecimal) bytes past the beginning of the DCB. The address of the DCB is in register 8.

```
listdeb 8r%+2c% field(debdcbad,deboflgs)
```

TEST—LISTDS Command

Use the LISTDS command to display attributes of specific data sets at the terminal. For a description of the LISTDS command syntax and function, see the “LISTDS Command” on page 1-193.

TEST—LISTMAP Subcommand

Use the LISTMAP subcommand to display a virtual storage map at the terminal. The map identifies the location and assignment of any storage assigned to the program.

All storage assigned to the problem program and its subtasks as a result of GETMAIN requests is located and identified by subpool (0-127). All programs assigned to the problem program and its subtasks are identified by name, size, location, and attribute. Storage assignment and program assignment are displayed by task.

TEST—LISTMAP Subcommand Syntax

```
►►──LISTMAP──┬──────────────────────────┬──────────────────────────────►◄
             └─PRINT(data_set_name)─────┘
```

TEST—LISTMAP Subcommand Operands

PRINT(*data_set_name*)

specifies the name of a sequential data set to which the data is directed. If you omit this operand, the data is directed to your terminal.

The data format is blocked variable-length records. Old data sets with the standard format and block size are treated as NEW, if they are being opened for the first time. Otherwise, they are treated as MOD data sets.

If PRINT(*data_set_name*) is specified, use the following table to determine the format of the output.

If the *data_set_name* is not specified within quotes, the descriptive qualifier TESTLIST is added.

If your record type was:	**Fixed, Fixed Blocked, or Undefined**		**Variable or Variable-Blocked**	
Then it is changed to variable-blocked with the following attributes:	Recordsize 125	Blocksize 1629	Recordsize 125	Blocksize 129

Record and block sizes greater than those specified in the preceding table are unchanged.

The specified data set is kept open until:

- The TEST session is ended by a RUN or END subcommand, or
- A LIST, LISTDCB, LISTDEB, LISTMAP, LISTPSW, LISTTCB, or LISTVSR subcommand is entered specifying a different PRINT data set. In this case, the previous data set is closed and the current one is opened.

TEST—LISTMAP Subcommand Examples

Example 1

Operation: Display a map of virtual storage at your terminal.

```
listmap
```

Example 2

Operation: Direct a map of virtual storage to a data set.

Known:

- The name of the data set: ACDQP.MAP.TESTLIST
- The prefix in the user's profile: ACDQP

```
listmap print(map)
```

TEST—LISTPSW Subcommand

Use the LISTPSW subcommand to display a program status word (PSW) at your terminal.

TEST—LISTPSW Subcommand Syntax

```
►►──LISTPSW──┬──────────────────┬──┬──────────────────────────┬──────────►◄
             └─ADDR(address)────┘  └─PRINT(data_set_name)─────┘
```

TEST—LISTPSW Subcommand Operands

ADDR(*address*)

specifies the address of a particular PSW. If you do not specify an address, you receive the current PSW for the program that is executing. You can specify *address* as:

- An absolute address
- A symbolic address
- A relative address
- An indirect address
- An address expression
- A module name and entry name (separated by a period)
- An entry name (preceded by a period).

PRINT(*data_set_name*)

specifies the name of a sequential data set to which the data is directed. If you omit this operand, the data is directed to your terminal.

The data format is blocked variable-length records. Old data sets with the standard format and block size are treated as NEW, if they are being opened for the first time. Otherwise, they are treated as MOD data sets.

If PRINT(*data_set_name*) is specified, use the following table to determine the format of the output.

If the *data_set_name* is not specified within quotes, the descriptive qualifier TESTLIST is added.

If your record type was:	**Fixed, Fixed Blocked, or Undefined**		**Variable or Variable-Blocked**	
Then it is changed to variable-blocked with the following attributes:	Recordsize 125	Blocksize 1629	Recordsize 125	Blocksize 129

Record and block sizes greater than those specified in the preceding table are unchanged.

The specified data set is kept open until:

- The TEST session is ended by a RUN or END subcommand, or
- A LIST, LISTDCB, LISTDEB, LISTMAP, LISTPSW, LISTTCB, or LISTVSR subcommand is entered specifying a different PRINT data set. In this case, the previous data set is closed and the current one is opened.

TEST—LISTPSW Subcommand Examples

Example 1

Operation: Display the current PSW at your terminal.

```
listpsw
```

Example 2

Operation: Direct the input/output old PSW into a data set.

Known:

- The prefix in the user's profile: ANZAL2
- The address of the PSW (in hexadecimal): 38
- The name of the data set: ANZAL2.PSWS.TESTLIST

```
listpsw addr(38.) print(psws)
```

TEST—LISTTCB Subcommand

Use the LISTTCB subcommand to display the contents of a task control block (TCB). You can provide the address of the beginning of the TCB.

If a copy of the control block is in extended virtual storage, the LISTTCB subcommand accepts addresses greater than 16MB, even though the block itself is below 16MB in virtual storage. Even if an absolute address is specified, LISTTCB displays the virtual address of the requested TCB before formatting the control block.

If you want, you can have only selected fields displayed.

TEST—LISTTCB Subcommand Syntax

```
►►─LISTTCB──┬──────────────────┬──┬──────────────────────────┬──────────►
            └─ADDR(address)────┘  └─FIELD(──┬─name─┬──)──────┘
                                             ▲      │
                                             └──────┘
►──┬──────────────────────────┬──────────────────────────────────────►◄
   └─PRINT(data_set_name)─────┘
```

TEST—LISTTCB Subcommand Operands

ADDR(*address*)

specifies the address must be on a fullword boundary. The address identifies the particular TCB that you want to display. If you omit an address, the TCB for the current task is displayed. You can specify *address* as:

- An absolute address
- A symbolic address
- A relative address
- An indirect address
- An address expression
- A module name and entry name (separated by a period)
- An entry name (preceded by a period).

FIELD(*name*)

specifies one or more names of the particular fields in the TCB that you want to display. If you omit this operand, the entire TCB is displayed.

PRINT(*data_set_name***)**
specifies the name of a sequential data set to which the data is directed. If you omit this operand, the data is directed to your terminal.

The data format is blocked variable-length records. Old data sets with the standard format and block size are treated as NEW, if they are being opened for the first time. Otherwise, they are treated as MOD data sets.

If PRINT(*data_set_name*) is specified, use the following table to determine the format of the output.

If the *data_set_name* is not specified within quotes, the descriptive qualifier TESTLIST is added.

If your record type was:	**Fixed, Fixed Blocked, or Undefined**		**Variable or Variable-Blocked**	
Then it is changed to variable-blocked with the following attributes:	Recordsize 125	Blocksize 1629	Recordsize 125	Blocksize 129

Record and block sizes greater than those specified in the preceding table are unchanged.

The specified data set is kept open until:

- The TEST session is ended by a RUN or END subcommand, or
- A LIST, LISTDCB, LISTDEB, LISTMAP, LISTPSW, LISTTCB, or LISTVSR subcommand is entered specifying a different PRINT data set. In this case, the previous data set is closed and the current one is opened.

TEST—LISTTCB Subcommand Examples

Example 1
Operation: Direct a copy of the TCB for the current task into a data set.

Known:

- The prefix in the user's profile is NAN75.
- The name of the data set: NAN75.TCBS.TESTLIST

```
listtcb print(tcbs)
```

Example 2
Operation: Save a copy of some fields of a task's control block that is not active in a data set for future information.

Known:

- The symbolic address of the TCB: MYTCB2
- The fields that are being requested: TCBTIO TCBCMP TCBGRS
- The name of the data set: SCOTT.TCBDATA

```
listtcb addr(mytcb2) field(tcbtio,tcbcmp,tcbgrs)-
print('scott.tcbdata')
```

Example 3

Operation: List the entire TCB for the current task.

```
listtcb
```

TEST—LISTVP Subcommand

Use the LISTVP subcommand to display the partial sum number and the vector section size of a vector machine.

TEST—LISTVP Subcommand Syntax

```
►►──LISTVP──────────────────────────────────────────────────────────►◄
```

TEST—LISTVP Subcommand Examples

Example 1

Operation: Determine the vector section size and partial sum number of the vector machine currently being used.

```
listvp
```

The output might look similar to the following:

```
IKJ57026I VECTOR SYSTEM PARAMETERS
SECTION SIZE:  00256[8]
PARTIAL SUM:   00004[8]
```

TEST—LISTVSR Subcommand

Use the LISTVSR subcommand to display the contents of the vector status register (VSR).

TEST—LISTVSR Subcommand Syntax

```
►►──LISTVSR──┬──────────────────┬──┬──────────────────────────┬──────►◄
             └─ADDR(address)────┘  └─PRINT(data_set_name)────┘
```

TEST—LISTVSR Subcommand Operands

ADDR(*address*)

specifies the address of a particular vector status register. If you do not specify an address, you receive the current vector status register for the program that is executing. You can specify *address* as:

- An absolute address
- A symbolic address
- A relative address
- An indirect address
- An address expression
- A module name and entry name (separated by a period)

[8] This value will differ based on the machine currently used.

- An entry name (preceded by a period).

PRINT(*data_set_name***)**
specifies the name of a sequential data set to which the data is directed. If you omit this operand, the data is directed to your terminal.

The data format is blocked variable-length records. Old data sets with the standard format and block size are treated as NEW, if they are being opened for the first time. Otherwise, they are treated as MOD data sets.

If PRINT(*data_set_name*) is specified, use the following table to determine the format of the output.

If the *data_set_name* is not specified within quotes, the descriptive qualifier TESTLIST is added.

If your record type was:	**Fixed, Fixed Blocked, or Undefined**		**Variable or Variable-Blocked**	
Then it is changed to variable-blocked with the following attributes:	Recordsize 125	Blocksize 1629	Recordsize 125	Blocksize 129

Record and block sizes greater than those specified in the preceding table are unchanged.

The specified data set is kept open until:

- The TEST session is ended by a RUN or END subcommand, or
- A LIST, LISTDCB, LISTDEB, LISTMAP, LISTPSW, LISTTCB, or LISTVSR subcommand is entered specifying a different PRINT data set. In this case, the previous data set is closed and the current one is opened.

TEST—LISTVSR Subcommand Examples

Example 1

Operation: Display the contents of a vector status register after issuing a RESTORE VSR instruction (VSRRS):

```
listvsr
```

The output might look similar to the following:

```
VSR LOCATED AT 7FFF9EF8
      RESERVED        VMM    VCT     VIX      VIU        VCH
   00000000 00000000   0    00127   00127   00000000   00000000
```

TEST—LOAD Subcommand

Use the LOAD subcommand to load a program into real storage for execution.

Use the LOAD subcommand to load a program above or below 16MB virtual storage based on its RMODE characteristics. If the displayed entry address is greater than X'7FFFFFFF', the addressing mode is 31-bit. In this case, X'80000000' must be subtracted from the displayed number to obtain the actual address.

TEST—LOAD Subcommand Syntax

```
►►─LOAD──┬─*──────────────┬──┬──────────┬──┬──────────┬──────────────►◄
         └─data_set_name──┘  └─(member)─┘  └─/password─┘
```

TEST—LOAD Subcommand Operands

data_set_name
specifies the name of a member of a PDS or a PDSE from which the program is to be executed.

***** specifies that the program to be loaded resides in the LPA and the standard libraries are to be searched (linklist).

(*member***)**
specifies the name of a member of the partitioned data set containing the module to be loaded. If the member name is not specified, TEMPNAME is used. If the *data_set_name* is not specified within quotes, the LOAD qualifier is added.

password
specifies the password for a password protected data set.

TEST—LOAD Subcommand Examples

Example 1

Operation: Load a program named GSCORES from the data set ATX03.LOAD.

Known:

- The prefix in the user's profile is ATX03.

```
load 'atx03.load(gscores)'
```

or

```
load(gscores)
```

Example 2

Operation: Load a module named ATTEMPT from data set ATX03.TEST.LOAD.

Known:

- The prefix in the user's profile is ATX03.

```
load 'atx03.test.load(attempt)'
```

or

```
load test(attempt)
```

However, do not specify the following because this results in a search for ATX03.TEST.load.load:

```
load test.load(attempt)
```

Example 3

Operation: Load a module named PERFORM from data set ATX03.TRY.

```
load 'atx03.try(perform)'
```

TEST—OFF Subcommand

Use the OFF subcommand to remove breakpoints from a program.

TEST—OFF Subcommand Syntax

```
►►─OFF──┬──────────────────────────────────────────────────────────────►◄
        │─address──┬──────────────────────────┬──────────────────────────┤
        │          └─:address─┘                │
        │──(──┬──────────────────────────┬──)──┘
        │     │──address──┬──────────────┬──│
        │     │           └─:address─┘   │
        │     └──────────────────────────┘
        │     ▼ ,
```

TEST—OFF Subcommand Operands

address

specifies the location of a breakpoint that you want to remove. The address must be on a halfword boundary. If no address is specified, all breakpoints are removed. You can specify *address* as:

- An absolute address
- A symbolic address
- A relative address
- An indirect address
- An address expression
- A module name and entry name (separated by a period)
- An entry name (preceded by a period).

address:*address*

specifies a range of addresses. All breakpoints in the range of addresses are removed. See the description of address for a list of valid address types.

(*address***)**

specifies the location of several breakpoints that you want to remove. See the description of address for a list of valid address types.

Note: The list *must* be in parentheses with each address separated by one or more blanks or a comma.

TEST—OFF Subcommand Examples

Example 1

Operation: Remove all breakpoints in a section of a program.

Known:

- The beginning and ending addresses of the section: LOOPC EXITC

```
off loopc:exitc
```

Example 2

Operation: Remove several breakpoints located at different positions.

Known:

- The addresses of the breakpoints: COUNTRA +2c 3r%

```
off (countra +2c 3r%)
```

Example 3

Operation: Remove all breakpoints in a program.

```
off
```

Example 4

Operation: Remove one (1) breakpoint.

Known:

- The address of the breakpoint is in register 6.

```
off 6r%
```

TEST—OR Subcommand

Use the OR subcommand to:

- Alter the contents of the general registers.
- OR an entire data field with another.

The OR subcommand performs logical OR data or addresses from:

- One virtual storage address to another
- One general register to another
- A general register to virtual storage
- Virtual storage to a general register
- An access register to virtual storage
- Virtual storage to an access register
- One access register to another.

TEST—OR Subcommand Syntax

```
                                                   ┌─NOPOINTER─┐
►►──OR──address_1──address_2──┬──────────────────────────────┬──┴──────────►
                              │                              │   └─POINTER───┘
                              └─LENGTH(──┬─4──────────┬──)──┘
                                         └─integer────┘

►──┬─────────────────────────────┬──┬─────────────────────────────┬──►◄
   ├─ARFROM(register_number)─────┤  ├─ARTO(register_number)────────┤
   └─ALETFROM(alet_value)────────┘  └─ALETTO(alet_value)──────────┘
```

TEST—OR Subcommand Operands

address_1
: specifies the location of data that is to be ORed with data pointed to by *address_2*.

If you do not specify POINTER and there is a breakpoint in the data pointed to by *address_1*, the TSO/E TEST command processor terminates the OR operation.

address_2
specifies the location of the data that is to be ORed with data pointed to by *address_1*. When the OR operation is complete, the result is stored at this location.

You can specify *address_1* and *address_2* as:

- An absolute address
- A symbolic address
- A relative address
- An indirect address
- An address expression
- A module name and entry name (separated by a period)
- A general register
- An entry name (preceded by a period)
- An access register.

ARTO(*register_number***)**
specifies that the location of the data pointed to by *address_2* is in an alternate address/data space referred to by an access register. Valid access register numbers are 0 through 15. The operands ARTO and ALETTO (ALTO) are mutually exclusive.

ARFROM(*register_number***)**
specifies that the location of the data pointed to by *address_1* is in an alternate address/data space referred to by an access register. Valid access register numbers are 0 through 15. The operands ARFROM, ALETFROM, and POINTER are mutually exclusive.

ALETTO(*alet_value***) | ALTO(***alet_value***)**
specifies that the location of the data pointed to by *address_2* is in an alternate address/data space. The ALETTO value may be from 1 to 8 hexadecimal characters. The operands ALETTO and ARTO are mutually exclusive.

ALETFROM(*alet_value***) | ALFROM(***alet_value***)**
specifies that the location of the data pointed to by *address_1* is in an alternate address/data space. The ALETFROM value may be from 1 to 8 hexadecimal characters. The operands ALETFROM, ARFROM, and POINTER are mutually exclusive.

LENGTH(*integer***) | LENGTH(4)**
specifies the length, in decimal, of the field to be copied. If an integer is not specified, LENGTH defaults to 4 bytes. The maximum length is 256 bytes.

POINTER
specifies *address_1* is to be validity checked to see that it does not exceed maximum virtual storage size. *address_1* is then treated as an immediate operand (hexadecimal literal) with a maximum length of 4 bytes (that is, an address will be converted to its hexadecimal equivalent). When using the POINTER operand, do not specify a general register as *address_1*. The operands ARFROM, ALETFROM, and POINTER are mutually exclusive.

NOPOINTER
specifies *address_1* is to be treated as an address. If neither POINTER nor NOPOINTER is specified, NOPOINTER is the default.

The OR subcommand treats the 16 general registers as contiguous fields. You can OR 10 bytes from general register 0 to another location as follows:

```
or 0r 80060. length(10)
```

The OR subcommand ORs the 4 bytes of register 0, the 4 bytes of register 1, and the high-order 2 bytes of register 2 to virtual storage beginning at location 80060. When a register is specified as *address_1*, the maximum length of data that is ORed is the total length of the general registers or 64 bytes.

TEST—OR Subcommand Examples

Example 1

Operation: OR two fullwords of data, each in a virtual storage location, placing the result in the second location.

Known:

- The starting address of the data: 80680
- The starting address of where the data is to be: 80690

```
or 80680. 80690. length(8)
```

Example 2

Operation: OR the contents of the two registers, placing the result in the second register specified.

Known:

- The register which contains data specified as the first operand: 10
- The register which contains data specified as the second operand and the result: 5

```
or 10r 5r
```

Example 3

Operation: Turn on the high-order bit of a register.

Known:

- The OR value: X'80'
- The register: 1

```
OR 80. 1r l(1) pointer
```

Note: Specifying the pointer operand causes 80 to be treated as an immediate operand and not as an address.

Example 4

Operation: OR the contents of an area pointed to by a register into another area.

Known:

- The register which points to the area that contains the data to be ORed: 14
- The virtual storage location which contains the second operand and result: 80680
- The length of the data to be ORed: 8 bytes

```
or 14r% 80680. l(8)
```

Example 5

Operation: General register 1 points to data in the address/data space referred to by access register 1. OR four bytes where general register 1 points into location A080 in the address/data space referred to by the ALET 40C3A.

```
or 1r? A080. arfrom(1) aletto(40c3a)
```

TEST—PROFILE Command

Use the PROFILE command to establish, change, or list your user profile. For a description of the PROFILE command syntax and function, see the “PROFILE Command” on page 1-248.

TEST—PROTECT Command

Use the PROTECT command to prevent unauthorized access to a non-VSAM data set. For a description of the PROTECT command syntax and function, see the “PROTECT Command” on page 1-256.

TEST—QUALIFY Subcommand

Use the QUALIFY subcommand to qualify symbolic and relative addresses; that is, to establish the starting or base location to which displacements are added so that an absolute address is obtained. The QUALIFY subcommand allows you to uniquely specify which program and which CSECT within that program you intend to test using symbolic and relative addresses.

Alternately, you can specify an address to be used as the base location only for subsequent relative addresses. Each time you use the QUALIFY subcommand, previous qualifications are voided. Automatic qualification overrides previous qualifications.

Symbols that were established by the EQUATE subcommand before you enter QUALIFY are not affected by the QUALIFY subcommand.

TEST—QUALIFY Subcommand Syntax

```
►►──┬─QUALIFY─┬──┬─address──────────────────────────────────┬──►◄
    └─Q───────┘  └─module_name─┬──────────────┬─┬──────────┬─┘
                               └─.entry_name──┘ └─TCB(address)─┘
```

TEST—QUALIFY Subcommand Operands

address
specifies the base location to be used in determining the absolute address for relative addresses only. It does not affect symbolic addressing. You can specify *address* as:

- An absolute address
- A symbolic address
- A relative address
- An indirect address
- An address expression
- A module name and entry name (separated by a period)
- An entry name (preceded by a period).

module_name[.*entry_name*]
specifies the name by which a load module is known, and optionally, an externally referable name within a module. If only a module is specified, the first entry point in the module will be supplied.

TCB(*address***)**
specifies the address of a task control block (TCB). This operand is necessary when programs of the same name are assigned to two or more subtasks and you must establish uniquely which one is to be qualified.

Note: When using QUALIFY in combination with other subcommands of TEST (with relative addressing) for routines such as user exit routines, validity check routines, and subtasking, the load module or CSECT indicated might differ from the one that was qualified. This is due to system control processing of automatic qualification.

TEST—QUALIFY Subcommand Examples

Example 1

Operation: Establish the absolute address 5F820 as a base location for relative addressing.

```
qualify 5f820.
```

Note: This is useful in referring to relative addresses (offsets) within a control block or data area.

Example 2

Operation: Establish a base location for resolving relative addresses.

Known:

- The module name is BILLS.

```
qualify bills
```

Example 3

Operation: Establish an address as a base location for resolving relative addresses.

Known:

- The address is 8 bytes past the address in register 7.

```
q 7r%+8
```

Example 4

Operation: Establish a base location for relative addresses to a symbol within the currently qualified program.

Known:

- The base address: QSTART

```
qualify qstart
```

Example 5

Operation: Establish a symbol as a base location for resolving relative addresses.

Known:

- The module name: MEMBERS
- The CSECT name: BILLS
- The symbol: NAMES

```
qualify members.bills.names
```

Example 6

Operation: Define the base location for relative and symbolic addressing.

Known:

- The base location is the address of a program named OUTPUT.

```
q output
```

Example 7

Operation: Change the currently qualified module and CSECT. This means defining the base location for relative and symbolic addresses to a new program. The module can be a unique name under any task, or a module under the current task. If there is another one by the same name under a different task, the module under the current task would be used.

Known:

- The module name: PROFITS
- The CSECT name: SALES

```
qualify profits.sales
```

Example 8

Operation: Change the base location for symbolic and relative addresses to a module that has the same name as another module under a different task.

Known:

- The module name: SALESRPT
- The specified module is the one under the task represented by the TCB whose address is in general register 5.

```
q salesrpt tcb(5r%)
```

TEST—RENAME Command

Use the RENAME command to change the name of a non-VSAM cataloged data set or a member of a PDS, or to create an alias for a member of a partitioned data set. For a description of the RENAME command syntax and function, see the “RENAME Command” on page 1-271.

TEST—RUN Subcommand

Use the RUN subcommand to cause the program that is being tested to execute to termination without recognizing any breakpoints. When you specify this subcommand, TEST is terminated. When the program completes, you can enter another command. Overlay programs are not supported by the RUN subcommand. Use the GO subcommand to execute overlay programs.

TEST—RUN Subcommand Syntax

```
►►─┬─RUN─┬─┬─address─┬─┬─AMODE──────────────────────────────────┬──────────►
   └─R───┘ └─────────┘ │                                        │
                       └─(─┬─SWITCH─┬─)─┘
                           ├─24─────┤
                           └─31─────┘

►─┬─ASCMODE(─┬─AR──────┬─)─┬──────────────────────────────────────────►◄
  │          └─PRIMARY─┘   │
```

TEST—RUN Subcommand Operands

address

execution begins at the specified address. If you do not specify an address, execution begins at the last point of interruption or at the entry point, if the GO or CALL subcommand was not previously specified. You can specify *address* as:

- An absolute address
- A symbolic address
- A relative address
- An indirect address
- An address expression
- A module name and entry name (separated by a period)
- An entry name (preceded by a period).

AMODE [(24 | 31 | SWITCH)]

specifies the addressing mode in which program execution resumes after the RUN subcommand has been issued. You can specify AMODE with RUN, even if the address is not given. However, if AMODE or any abbreviation of AMODE is defined as a symbolic address, it should not be specified with RUN if your intention is to start execution at the address pointed to by AMODE. If RUN AMODE is specified, program execution starts at the last breakpoint and the SWITCH default is taken. If AMODE(SWITCH) is specified, program execution resumes in the addressing mode, which was non-current when RUN was issued. The current addressing mode can be determined by issuing the LISTPSW command.

Note the following:

- If you do not specify AMODE, there is no change in addressing mode.
- If you specify RUN with no operands, the program being tested is restarted at the next executable instruction. However, if the tested program abends in an address space other than home, the home and primary address space identifiers (ASIDs) are different, and the instruction address in the PSW refers to an address space which TEST cannot access. Therefore, do not specify RUN without operands after such an abend.

ASCMODE(AR | PRIMARY)
specifies the PSW mode in which program execution resumes after you issue the RUN subcommand. If you specify ASCMODE(PRIMARY), the PSW mode is set to execute the program using the primary address space control mode (in primary mode). When ASCMODE(AR) is specified, the PSW is set to execute the program in AR mode.

TEST—RUN Subcommand Examples

Example 1

Operation: Execute a program to termination from the last point of interruption.

```
run
```

Example 2

Operation: Execute a program to termination from a specific address.

Known:

- The address: +A8

```
run +a8
```

TEST—SEND Command

Use the SEND command to send a message to another terminal user or to the system operator. For a description of the SEND command syntax and function, see the “SEND Command” on page 1-276.

TEST—SETVSR Subcommand

Use the SETVSR subcommand to set fields in the vector status register. The SETVSR subcommand allows you to:

- Specify the vector mask register control mode
- Update the vector count
- Update the vector interruption index
- Update the vector in-use bits.

TEST—SETVSR Subcommand Syntax

```
►►──SETVSR──┬─MASK───┬──┬─VCT(X'nnnn')─┬──┬─VIX(X'nnnn')─┬──►
            └─NOMASK─┘  └──────────────┘  └──────────────┘

►──┬─VIU(X'nn')─┬──────────────────────────────────────────►◄
   └────────────┘
```

TEST—SETVSR Subcommand Operands

MASK | NOMASK
specifies the vector mask register control mode.

VCT(X'nnnn')
allows you to update the vector count. (X'nnnn') specifies the number of vector elements that are to be processed.

VIX(X'nnnn')
allows you to update the vector interruption index. (X'nnnn') specifies the vector element that processing is to start with.

VIU(X'nn')
allows you to update the vector in-use bits. (X'nn') specifies active register pairs.

TEST—SETVSR Subcommand Examples

Example 1

Operation: Set values in the vector status register.

Known:

- The vector mask register control mode is to be **NOMASK**
- The vector count in hexadecimal: 75
- The vector interruption index in hexadecimal: 76
- The vector in-use bits in hexadecimal: B1

```
setvsr nomask vct(x'75') vix(x'76') viu(x'b1')
```

TEST—STATUS Command

Use the STATUS command to display the status of batch jobs at the terminal. For a description of the STATUS command syntax and function, see the “STATUS Command” on page 1-287.

TEST—SUBMIT Command

Use the SUBMIT command to submit one or more batch jobs for processing under TEST. For a description of the SUBMIT command syntax and function, see the “SUBMIT Command” on page 1-288.

TEST—TERMINAL Command

Use the TERMINAL command to define the operating characteristics for the type of terminal you are using. For a description of the TERMINAL command syntax and function, see the “TERMINAL Command” on page 1-293.

TEST—UNALLOC Command

Use the UNALLOC command to release (deallocate) previously allocated data sets that are no longer needed. Because FREE is an alias of the FREEMAIN subcommand, use UNALLOC to free files under TEST. For a description of the FREE command syntax and function, see the “FREE Command” on page 1-162.

TEST—WHERE Subcommand

Use the WHERE subcommand to obtain:

- An absolute address
- The name of a module and CSECT
- A relative offset within the CSECT
- The address of the TCB for the specified address.

You can also use the WHERE subcommand to obtain the absolute address serving as the starting or base location for the symbolic and relative addresses in the program. Alternately, you can obtain the absolute address of an entry point in a particular module or control section (CSECT). If you do not specify any operands for the WHERE subcommand, you receive the address of the next executable instruction, the related load module and CSECT names, and the hexadecimal offset.

Note: After an abend outside the home address space, do not specify WHERE without operands. The home and primary address space identifiers (ASIDs) are different after an abend, resulting in an instruction address which TEST cannot access.

TEST—WHERE Subcommand Syntax

```
►►──┬─WHERE─┬──┬──────────┬──────────────────────────────────────►◄
    └─W─────┘  ├─address───┤
               └─module_name┘
```

TEST—WHERE Subcommand Operands

address

You can specify *address* as:

- An absolute address
- A symbolic address
- A relative address
- An indirect address
- An address expression
- A module name and entry name (separated by a period)
- An entry name (preceded by a period).

If you specify WHERE without an address, the address of the next executable instruction, the related load module and CSECT names, and the hexadecimal offset are displayed.

module_name
specifies the name by which a load module is known or the name of an object module. The output of the WHERE subcommand is the module name, the CSECT name, the offset within the CSECT, the absolute address, and the address of the TCB. If only the module name was specified, the only output is the absolute address of the module and the address of the TCB for the task under which the module is found.

If the specified address is *not* within the extent of any user program, only the absolute address is returned. Along with the absolute address, a message will be returned stating that the specified address is not within the program extent. If no operands are specified, the absolute address returned is the address of the next executable instruction.

TEST—WHERE Subcommand Examples

Example 1

Operation: Determine the absolute address of the next executable instruction.

```
where
```

Example 2

Operation: Determine in which module an absolute address is located.

Known:

- The absolute address: 3E2B8

```
where 3e2b8.
```

Example 3

Operation: Obtain absolute address of +2c4.

```
w +2c4
```

Note: An unqualified relative address is calculated from the currently qualified address (as specified using the QUALIFY command or the current module and CSECT, if no other qualification exists). The module name, CSECT name, and TCB address are also obtained along with the absolute address.

Example 4

Operation: Obtain offset of the symbol SALES in the current program.

```
where sales
```

Note: The module name, CSECT name, absolute address, and the TCB address are returned along with the offset of SALES.

Example 5

Operation: Determine in which module the address in register 7 is located.

```
w 7r%
```

Note: The offset, absolute address, and the TCB address are also returned with the module name.

Example 6

Operation: Obtain the virtual address of the module named CSTART.

```
where cstart
```

Example 7

Operation: Obtain the virtual address of the CSECT named JULY in the module named NETSALES.

```
where netsales.july
```

Example 8

Operation: Determine the relative address of symbol COMPARE in the module named CALCULAT and CSECT named AVERAGE.

```
w calculat.average.compare
```

Note: The absolute address and TCB address are also returned with the relative address.

Example 9

Operation: Determine the virtual address of +1CA.

Known:

- The CSECT: MARCH
- The module: GETDATA

```
where getdata.march.+1ca
```

Note: You also get the TCB address with the virtual address.

Example 10

Operation: Obtain the absolute address for relative address +2C in CSECT named PRINTIT within the currently qualified module.

```
where .printit.+2C
```

TIME Command

Use the TIME command to obtain the following information:

- Cumulative CPU time (from LOGON)
- Cumulative session time (from LOGON)
- Total service units used, which includes:
  - CPU service units - A measure of task execution time.
  - I/O service units - A measure of SMF data set activity.
  - Storage service units - A measure of the page frame usage.
- Local time of day

Refers to the time of execution for this command. It is displayed as follows:

```
local time of day in hours(HH),
minutes(MM), and seconds(SS),
(am or pm is also displayed)
```

- Today's date.

To enter the command while a program is executing, you must first cause an attention interruption. The TIME command has no effect on the executing program.

TIME Command Syntax

```
►►──TIME──────────────────────────────────────────────────────────►◄
```

TIME Command Return Code

The return code is always zero.

TRANSMIT Command

Use the TRANSMIT command to send information (a message), or a copy of information (a data set), or both, to another user. The TRANSMIT command converts this data into a special format so that it can be transmitted to other users in the network. Use the RECEIVE command to retrieve the data and restore it to its original format.

TRANSMIT Command Syntax

```
►►─┬─TRANSMIT─┬─┬─addressee──────────────┬─┬─TERMINAL──────────────┬►
   └─XMIT─────┘ │ ┌──────────┐           │ │ ┌─DATASET─┬─(dsname)─┐ │
                └─(──▼──,──adressee──)───┘ │ └─DSNAME──┘          │ │
                                           └─DDNAME─┬─(ddname)────┘
                                                    └─FILE───────┘

   ┌─MESSAGE─┐
   │ └─MSG───┘                                  ┌─NOCOPYLIST─┐
►──┼──────────────────────────────────────────┼────────────┼──────────────────►
   │ ┌─MSGDDNAME─┬─(ddname)─┐                  └─COPYLIST───┘   └─ENCIPHER─┘
   │ └─MSGFILE───┘          │
   └─MSGDATASET─┬─(dsname)─┘
     └─MSGDSNAME┘

   ┌─EPILOG───┐
►──┼──────────┼──┬─FULLSCREEN──────┬──┬─LOG──────────┬──────────────────────►
   └─NOEPILOG─┘  └─LINE─┬─(xx)─┬──┘  │ └─(ALL)──────┘
                        └──────┘     └─NOLOG──────────┘

►──┬─LOGDATASET─┬──┬─LOGNAME(name)─┬──┬──────────────────────────────────────►
   ├─LOGDSNAME──┤  │               │  │ ┌──────────┐
   └─(dsname)───┘  │               │  └─MEMBERS(──▼──,──member──)──────────┘
                   │               │
                   │               │
►──┬─NOTIFY─┬─────┬──┬─PARM(parameter_string)─┬──┬─PDS──────────┬──────────────►
   │        └─(ALL)┘  │                       │  └─SEQUENTIAL───┘
   └─NONOTIFY─────────┘                       └──────────────────────────────

►──┬─PROLOG───┬──┬─SYSOUT(──┬─*──────────────┬──)──┬──────────────────────────►◄
   └─NOPROLOG─┘  │          └─sysout_class───┘     │
                 │                                 │
►──┬─OUTDDNAME─┬─(ddname)─┬──┬──────────────────────────────────────────────►◄
   │ └─OUTFILE─┘          │  │
   └─OUTDATASET─┬─(dsname)─┘  │
     └─OUTDSNAME┘             │
```

TRANSMIT Command Operands

Note: If you specify either MSGDDNAME or MSGFILE, or MSGDATASET or MSGDSNAME, the TERMINAL operand is no longer the default.

(*addressee*)
specifies the information identifying the target user(s). You can combine one or more of the following: a node and user ID specified as *node.user_id* or *node/user_id*, a nickname, or a distribution list name. If you identify only one user as the addressee, you can omit the parentheses. See “NAMES Data Set Function” on page 1-371.

A maximum of 200 node/userid combinations and 200 nicknames may be specified, but the total number of addressees may not exceed 200.

DATASET(*dsname*) | DSNAME(*dsname*)
specifies the name of a data set to be transmitted. The data set must be on a direct access storage device (DASD).

DDNAME(*ddname*) | FILE(*ddname*)
specifies the 1 to 8 character ddname of a preallocated file to be transmitted. The data set must be on a direct access storage device (DASD). If you transmit

a member of a preallocated partitioned data set, you must specify the MEMBERS operand.

TERMINAL
specifies data input is to be taken from the terminal. You are prompted to enter data to be transmitted either in line mode or in full- screen mode as specified by the LINE or FULLSCREEN operand.

MSGDDNAME(*ddname*) | MSGFILE(*ddname*)
specifies a 1 to 8 character ddname or file name of the file that is to be transmitted. You must allocate the file before it is transmitted. The system transmits the file as a message.

The file must have a record format of either FB or F and a record length of 80. You can specify a sequential data set or a member of a partitioned data set. MSGDDNAME or MSGFILE is mutually exclusive with MSGDATASET or MSGDSNAME, and MESSAGE or MSG.

If you specify either MSGDDNAME or MSGFILE, the TERMINAL operand is no longer the default. This allows you to send the data or message to be displayed at the recipient's terminal without having to enter the data or message either in line mode or in full-screen mode. If you want full-screen mode, you must explicitly specify TERMINAL.

When you specify the ENCIPHER operand, the following can happen:

- If you specify the ENCIPHER operand and either the TERMINAL, DATASET, DDNAME, DSNAME, or FILE operands, the system does *not* encipher the data set specified with the MSGDDNAME or MSGFILE operand.
- If you specify ENCIPHER and do *not* specify the TERMINAL, DATASET, DDNAME, DSNAME, or FILE operands, the system enciphers the data set specified with the MSGDDNAME or MSGFILE operand.

The ENCIPHER operand is described later in this section.

MSGDATASET(*dsname*) | MSGDSNAME(*dsname*)
specifies the data set that is to be transmitted. The system transmits the data set as a message.

The data set must have a record format of either FB or F and a record length of 80. You can specify a sequential data set or a member of a partitioned data set. MSGDATASET or MSGDSNAME is mutually exclusive with MSGDDNAME or MSGFILE, and MESSAGE or MSG.

If you specify either MSGDATASET or MSGDSNAME, the TERMINAL operand is no longer the default. This allows you to send the data or message to be displayed at the recipient's terminal without having to enter the data or message either in line mode or in full-screen mode. If you want full-screen mode, you must explicitly specify TERMINAL.

When you specify the ENCIPHER operand, the following can happen:

- If you specify the ENCIPHER operand and either the TERMINAL, DATASET, DDNAME, DSNAME, or FILE operands, the system does *not* encipher the data set specified with the MSGDATASET or MSGDSNAME operand.

- If you specify ENCIPHER and do *not* specify the TERMINAL, DATASET, DDNAME, DSNAME, or FILE operands, the system enciphers the data set specified with the MSGDATASET or MSGDSNAME operand.

The ENCIPHER operand is described later in this section.

MESSAGE | MSG
specifies that you are to be prompted for messages that accompany a transmitted data set. The prompt is either in full-screen mode or in line mode, depending on the terminal type and the specification of FULLSCREEN or LINE.

Note the following:

- If you specify both TERMINAL and MESSAGE, TSO/E prompts you twice for the data.
- TSO/E uses the prefix as the high-level qualifier for the name of the data set to be transmitted.

COPYLIST | NOCOPYLIST

COPYLIST specifies that TRANSMIT build a list of the specified addressees and append it as a prolog to the message. If a data set is being transmitted, the copylist is added as an accompanying message. If a message is being transmitted, COPYLIST prefixes the message text.

NOCOPYLIST specifies no copylist is to be generated or appended. NOCOPYLIST is the default.

ENCIPHER
specifies TRANSMIT should encipher the data by invoking the Access Method Services REPRO command. The TRANSMIT command prompts for ENCIPHER options to be passed with the REPRO command.

EPILOG | NOEPILOG

EPILOG specifies TRANSMIT should include epilog lines from the NAMES data set, if a terminal message is transmitted. An EPILOG is added unless you either type in NOEPILOG or have no epilog in your NAMES data set. EPILOG is the default.

NOEPILOG specifies no epilog lines should be included.

FULLSCREEN | LINE | LINE(*nn*)

FULLSCREEN requests all terminal input for messages or data be read in full-screen mode. This is the default for 3270 terminals capable of supporting a minimum screen size of 24 rows by 80 columns.

LINE | LINE(*nn*) requests terminal input for messages and data be read in single line mode. This is the default for non-3270 terminals. Use *nn* in a 1 to 2 character string to mark the end of data. You can also use LINE(*nn*) to allow a CLIST to provide messages or data. To terminate message input, enter a null line or the 1 or 2 character string value LINE(*nn*) in columns 1 and 2. LINE(*nn*) allows you to insert blank lines into the text. Leading blanks are eliminated when in a CLIST, but they are kept when not in a CLIST.

LOG | NOLOG | LOG(ALL)

LOG records the transmission in the LOG data set. LOG does not necessarily indicate that the log entry will contain a line for every addressee except for *node.userid* addressees. The LOG/NOLOG/LOGLST tags in the nicknames section of the NAMES data set or the LOG/NOLOG tags in the control section of the NAMES data set determine whether the log entry will contain addressee entries for a nickname or distribution list. Only one log entry is built in the default log file per transaction. LOG is the default. See “Logging Function of TRANSMIT and RECEIVE” on page 1-370. To ensure that the log entry contains a line for each addressee, including those on a distribution list, specify the LOG(ALL) option. See LOG(ALL) for more information.

NOLOG specifies not to record the transmission in the LOG data set. NOLOG overrides all LOG/LOGLST tags in the NAMES data set.

LOG(ALL) specifies the log entry contain a line for each addressee, including those derived from any distribution lists on the NAMES data set. This specification overrides the NOLOG/NOLOGLST tags in the NAMES data set.

LOGDATASET(*dsname*) | LOGDSNAME(*dsname*)
specifies an alternate name of a sequential data set in which to log the transmitted data. Users defined to more than one security label may need to specify a log data set name if they are logged on at a security label other than the SECLABEL of the profile that is protecting their log data set. A user's current security label (the security label the user is logged on with) must match the security label of the log data set in order for a transmission to be logged in the data set. Specifying a log data set allows users to log transmissions for each security label they are defined to in separate data sets. The data set must have a logical record length of 255, a record format of variable blocked, and a block size of 3120. If the data set does not exist, the system creates it.

LOGNAME(*name*)
uses the name as the LOGNAME qualifier on the log data set name. See “Logging Function of TRANSMIT and RECEIVE” on page 1-370.

MEMBERS(*member*)
transmits a list of members from the specified partitioned data set.

NOTIFY
notifies the sender when the data has been received. NOTIFY does not necessarily guarantee that notification will be requested except for *node.userid* addressees. For nicknames and distribution lists, control of notification is determined by the :NOTIFY or :NONOTIFY tag in the nickname section of the NAMES data set.

NOTIFY(ALL)
notifies the sender when the data has been received by all addressees. This operand overrides the :NOTIFY or :NONOTIFY tags in the nickname entries of the NAMES data set or distribution lists.

NONOTIFY
suppresses the notify function. This stops the notify function completely, overriding any specification in the NAMES data set or in the distribution lists.

PARM(*parameter_string*)
Your installation may instruct you to use this operand to specify installation dependent data.

PDS | SEQUENTIAL

PDS unloads a member or members of a partitioned data set (PDS) before transmission. This method preserves the directory information, but forces the receiving user to restore the member(s) into a PDS. PDS is the default.

Note: Some non-MVS systems cannot receive a partitioned data set. To transmit a member of a partitioned data set or a sequential data set, use the SEQUENTIAL keyword. For more information on data set transmission, see the SEQUENTIAL keyword description.

SEQUENTIAL sends a member of a partitioned data set or a sequential data set as a sequential data set. This method does not preserve directory information, but allows the receiving user to restore the data set as either a sequential data set or as a member of a partitioned data set. If transmission is by ddname, the member must be preallocated. The SEQUENTIAL keyword is ignored when no member is specified for a partitioned data set.

PROLOG | NOPROLOG

PROLOG specifies TRANSMIT should include prolog lines from the control section of the NAMES data set, if a terminal message is transmitted. PROLOG is the default.

NOPROLOG specifies not to include prolog lines.

SYSOUT(*sysoutclass* | *)
uses the SYSOUT class for messages from utility programs, which are used by TRANSMIT (for example IEBCOPY). If you specify a * (asterisk), TSO/E directs utility program messages to the terminal. The default is usually *, but the installation can modify it.

OUTDDNAME(*ddname*) | OUTFILE(*ddname*)
specifies the use of a preallocated file as the output data set for the TRANSMIT command. No data is written to SYSOUT for transmission. TSO/E assigns the DCB attributes as LRECL=80, BLKSIZE=3120, and RECFM=FB. Specify the ddname as either a sequential data set or a member of a partitioned data set.

Use OUTDDNAME or OUTFILE in conjunction with the INDDNAME or INFILE operand of the RECEIVE command. OUTDDNAME and OUTFILE are primarily intended for system programmer use.

OUTDSNAME(*dsname*) | OUTDATASET(*dsname*)
specifies the use of a data set as the output data set for the TRANSMIT command. No data is written to SYSOUT for transmission. TSO/E assigns the DCB attributes as LRECL=80, BLKSIZE=3120, and RECFM=FB. The data set must be a sequential data set.

Use OUTDSNAME or OUTDATASET in conjunction with the INDSNAME or INDATASET operand of the RECEIVE command. OUTDSNAME and OUTDATASET are primarily intended for system programmer use.

TRANSMIT Command Return Codes

Figure 1-55. TRANSMIT Command Return Codes

0	Processing successful.
4	Processing successful, but a warning message has been issued.
8	Processing incomplete. At least one transmission was unsuccessful.
12	Processing unsuccessful.
16	Processing unsuccessful. Abnormal end.

Transmitting Data Sets

You can use the TRANSMIT command to transmit sequential or partitioned data sets with record formats of F, FS, FB, FBS, V, VB, VBS, and U. The data sets must reside on a direct access storage device (DASD). For a VB or VBS data set, the largest logical record length (LRECL) TSO/E can transmit to VM is 65,535. Data sets with machine and ASA print-control characters are also supported. TRANSMIT does not support data sets with keys, ISAM data sets, VSAM data sets, or data sets with user labels.

If a partitioned data set (PDS) is transmitted, it is unloaded with IEBCOPY and then the unloaded version is transmitted. If a single member of a PDS is transmitted, it is generally unloaded before transmission. You can force transmission of a partitioned data set member as a sequential data set by using the SEQUENTIAL operand. Forced transmission of a partitioned data set member as a sequential data set does not preserve the directory information. The IEBCOPY unload preserves directory information, but the receiver must reload it into a partitioned data set.

Transmitting Data Sets as Messages

You can transmit a data set as a message by specifying MSGDDNAME or MSGFILE, or MSGDATASET or MSGDSNAME. Using these operands might reduce the time it takes to transmit a file or data set. The file or data set must have a record format of fixed block (FB) and a record length (LRECL) of 80. You can transmit either a sequential data set or a member of partitioned data set. For MSGDDNAME or MSGFILE, you must allocate the file before you transmit.

Transmitting Messages

If you specify MESSAGE when you transmit data, TRANSMIT prompts you for messages that accompany the data. These messages are shown to the receiving user when the RECEIVE command is issued. The messages are shown before you are prompted to indicate what to do with the data. You can enter messages in either full-screen mode or single line mode.

You can enter up to 220 lines of data in either full-screen mode or single line mode. Of the 220 lines of data, ten are reserved for the PROLOG lines. If you specify the EPILOG tag in the NAMES data set, you can specify an additional 10 lines beyond the 220 line limit. For full-screen mode, use the program function (PF) keys for scrolling (PF7 or PF19 and PF8 or PF20) and for termination (PF3 or PF15). For single line mode, messages are terminated by either a null line or the string value specified in LINE(*nn*).

Note: Full-screen mode is the default for 3270 terminals capable of supporting a minimum screen size of 24 rows by 80 columns.

Transmitting a message that you enter from the terminal is the simplest form of the TRANSMIT command. You specify TRANSMIT addressee-list and TRANSMIT defaults to terminal input. Messages sent in this manner are not saved in a data set, but are saved in the LOG data set.

Transmitting Enciphered Data

To encipher the transmitted data, specify the ENCIPHER operand. The TRANSMIT command prompts for encipher options, which are passed to the Access Method Services REPRO command.

Data Encryption Function of TRANSMIT and RECEIVE

The TRANSMIT and RECEIVE commands support encryption using DFSMS .

TSO/E uses the access method services REPRO command to encrypt data sets before transmitting them. However, your installation must allow encryption.

If you have either of the programs installed and your installation allows encryption, TRANSMIT, as required, invokes the access method services REPRO command to encrypt data sets before they are transmitted. The TRANSMIT and RECEIVE commands prompt you for encipher/decipher options and append what you entered as REPRO command suboperands of the ENCIPHER or DECIPHER operand.

Transmitting Data Sets and Messages with Security Labels

If your installation uses security labels and security checking, any data sets or messages you transmit have a security label associated with them. The security label you are logged on with when you issue the TRANSMIT command is the one associated with the data. In order for receivers to view the data set or message, they must be logged on with a security label that is equal to or greater than the one associated with the data.

Some considerations for transmitting and receiving data sets and messages with security labels are:

- Receivers can only receive data sets and messages that they are authorized to receive based on the security label they are logged on with.
- To receive data sets and messages with a greater security label, receivers can log on with a greater security label if their TSO/E user IDs are authorized to do so. They can then use the RECEIVE command to view the messages and data sets.
- If the receivers cannot log on with a security label that allows them to view the transmitted data (data set or message), the system deletes the data, unless your installation uses a JES installation exit to take some other action.
- The receivers do not receive a notice that they have data sets or messages to receive if the data was transmitted with a greater security label than the receivers are logged on with.

Logging Function of TRANSMIT and RECEIVE

The TRANSMIT and RECEIVE functions normally log each file transmitted and received. The TRANSMIT and RECEIVE commands create appropriate log data sets, if they do not already exist.

The name of the log data set is determined as follows:

1. If the LOGDATASET or LOGDSNAME operand is used, the data set ‘prefix.logdsname’ is used for logging.
2. In the absence of any user or installation specification, the default log data set name is ‘prefix.LOG.MISC’.
3. The qualifier LOG is called the log selector and can be changed by the :LOGSEL tag in the control section of the NAMES data set. This qualifier is common for all log data sets belonging to any given user.
4. The qualifier MISC is called the log name. It might be overridden by the LOGNAME operand on the TRANSMIT command, the :LOGNAME tag in the control section of the NAMES data set, or by the :LOGNAME tag in a nickname definition.

Use the log selector to define all of your log data sets under one name. The log name identifies each individual data set in the log data set. For example, you can list all of your log data sets by ‘prefix.LOG’. This would give you a list of all of your log data sets with the individual log names.

The log data sets have the following DCB attributes: LRECL=255, BLKSIZE=3120, and RECFM=VB.

With any given invocation of the TRANSMIT or RECEIVE command, logging can occur to more than one log data set depending upon the presence of the :LOGNAME tag on the nickname or distribution list entry in the NAMES data set. However, with any given invocation of the TRANSMIT or RECEIVE command, only one log entry is written to any one log data set. This log entry then contains an addressee entry for each addressee being logged to that log data set.

The first lines in each log entry contain a line of hyphens and a descriptor line. The format of the descriptor line is:

Column	Usage
1 - 8	Name of the command using the entry.
17 - 60	Name of the data set transmitted or received.
63 - 82	Time stamp from the command execution.

For the TRANSMIT command log entries, subsequent lines indicate the addressees to which the transmission was sent, the names of any members of a partitioned data set selected for transmission, and any messages entered with the TRANSMIT command.

For the RECEIVE command log entries, the second log line always identifies the originator of the transmission. The originator of the transmission can be the issuer of the TRANSMIT command (in the case of a file or message receipt) or the issuer of the RECEIVE command (if the log entry is for notification). If the entry in the log is a file or a message receipt, the time stamp recorded is from the TRANSMIT

command. If the entry in the log was a notification, the time stamp is from the RECEIVE command. The format is:

Column	Usage
9 - 15	Nickname of the originating user or blanks.
17 - 24	Node name of the originating user.
26 - 33	User ID of the originating user.
35 - 61	Name of the originating user or blank.
63 - 82	Time stamp from the originating command.

For RECEIVE command notification entries, the third log line identifies the original transmission. The data set name and time stamp on this line are those from the original transmission. The format of the third log line is:

Column	Usage
4 - 15	Error code from RECEIVE. STORED indicates that the RECEIVE operation was successful.
17 - 60	Data set name from the TRANSMIT command.
63 - 82	Time stamp from the TRANSMIT command.

NAMES Data Set Function

The TRANSMIT command allows several different specifications of a list of addressees. The simplest is a single addressee whose node name and user ID are specified explicitly. The next level is the nickname specification. The nickname is a 1 to 8 character name that is a synonym for the node and user ID. The TRANSMIT and RECEIVE commands find the actual node and user ID by looking up the nickname in tables provided in the NAMES data set. The final level of addressing is a distribution list. A definition in the NAMES data set identifies a distribution list name. The named list can reference up to 100 nicknames of either addressees or other distribution lists.

Each user of the TRANSMIT and RECEIVE commands can have one or more NAMES data sets to resolve nicknames and establish the default mode of operation. In the absence of any explicit installation specification, the name of the first of these data sets is ‘prefix.NAMES.TEXT’. The first data set contains the names of any other NAMES data sets. The data set can have either fixed or varying length records. Using varying length records will save disk space. The records are numbered according to standard TSO/E conventions. They can also be unnumbered. The data set is either blocked or unblocked with any record length less than or equal to 255.

The data set is composed of two sections, the control section and the nicknames section. The control section must precede the nicknames section. The control section ends at the first :NICK tag. Use the control section to set defaults for LOG/NOLOG and NOTIFY/NONOTIFY, prolog or epilog lines, the default log data set name, and to identify other NAMES data sets that are used.

The nicknames section contains one entry for each nickname and distribution list name that you want to define.

Each occurrence of a colon in the NAMES data set is treated as the start of a tag. If the tag following the colon is not one of those described below, it is treated as a user-defined tag that may be processed by an installation-written application that uses the NAMES data set. The information that follows a user-defined tag is ignored by TRANSMIT and RECEIVE processing. For more information about installation-written applications, see *OS/390 TSO/E Programming Guide*.

Control Section Tags

Use the beginning of the NAMES data set to control certain operations of the TRANSMIT and RECEIVE commands. The tags are optional. You can include any of the following tags:

:ALTCTL.*dsname*
specifies the fully-qualified file name of another file to be used in the nickname look up process. If TRANSMIT finds more than one :ALTCTL tag, TRANSMIT uses the order of the :ALTCTL tags to scan the files. You can specify up to ten :ALTCTL tags. All control section tags, the :LOG and :NOLOG tags, the :LOGNAME tag, and the :NOTIFY and :NONOTIFY tags are always ignored when read from any alternate NAMES data set.

:EPILOG.*text*
in the control section, specifies a text line to be appended at the end of any transmitted message. The maximum length of an epilog line is 72 characters. You can specify up to ten :EPILOG lines. If more than one :EPILOG record is found, records appear in the message in the same order as they are in the file. Text data for the :EPILOG tag should be on the same line as the :EPILOG tag.

:PROLOG.*text*
in the control section, specifies a text line to be inserted at the beginning of any transmitted message. The maximum length of a prolog line is 72 characters. You can specify up to ten :PROLOG lines. If more than one :PROLOG record is found, records appear in the message in the same order as they are in the file. Text data for the :PROLOG tag should be on the same line as the :PROLOG tag.

:LOGNAME.*name*
in the control section, serves as a default qualifier for the log data set name. If you specify it in the nickname entry, the value provided overrides the default set in the control section. See “Logging Function of TRANSMIT and RECEIVE” on page 1-370.

:LOGSEL.*name*
in the control section, specifies the second (middle) qualifier of all log data sets. See “Logging Function of TRANSMIT and RECEIVE” on page 1-370.

:LOG | :NOLOG
in the control section, indicates whether you want logging for any addressee specified by node and user ID and for any nickname that does not also specify :LOG or :NOLOG. If the nickname entry contains the :LOG or :NOLOG tag, this value overrides any value in the control section. However, it might have been overridden by a specification on the TRANSMIT command. If you specify NOLOG in your NAMES data set in the control section or on a :NICK tag, TSO/E prompts you with a message to receive data set ‘A.MAIL.USERID’. TSO/E then stores and places the message in ‘myid.MAIL.USERID’ where *myid* is the receiver of the message and USERID is the originator of the message.

The default is :NOLOG.

:NOTIFY | :NONOTIFY
in the control section, indicates whether you want notification for any addressee specified by node and user ID, and for any nickname where the nickname entry does not contain :NOTIFY or :NONOTIFY. The value of :NOTIFY or :NONOTIFY in the NAMES data set might be overridden by a similar specification on the TRANSMIT command. If you want to be notified for addressees on distribution lists, you must specify :NOTIFY on the distribution list in the control data set or specify NOTIFY(ALL).

The default is :NOTIFY.

Nicknames Section Tags

The nicknames section is composed of tags and their values in the same manner as the control section. The nicknames section is different from the control section in that it is divided by the occurrence of each :NICK tag and continues until the next :NICK tag, which starts the next definition. Use the nickname as either a nickname of a single user or the name of a distribution list. The :NODE and :USERID tags are present when you use the nickname for a user definition. The :LIST and/or :CC tags are present when you use the nickname for distribution list definition.

Use the log and notify tags, except for :LOGLST and :NOLOGLST, with either a user ID definition or a distribution list definition.

Note the following:

1. Each nickname entry must begin with the :NICK tag and :NICK must be the first non-blank character on the line.
2. You can specify the tags as all uppercase or all lowercase.
3. :NICK.*nickname* and :USERID.*user_id* are required.

:NOTIFY | :NONOTIFY
in the control section, specifies whether you want notification for any addressee specified by node and user ID, and for any nickname where the nickname entry does not contain :NOTIFY or :NONOTIFY. The value of :NOTIFY or :NONOTIFY in the NAMES data set might be overridden by a similar specification on the TRANSMIT command. If you want to be notified for addressees on distribution lists, you must specify :NOTIFY on the distribution list in the control data set or specify NOTIFY(ALL).

:NICK.*name*
indicates a nickname entry in the NAMES data set. It must be the first non-blank (except for line numbers) character of the record. The nickname is a 1 to 8 character string of non-blank alphanumeric characters.

:NODE.*node_id*
in the nickname entry, specifies a network node name for the nickname entry. If the :NODE tag is not present in a nickname entry, the local user's node name is assumed.

:USERID.*user_id*
specifies the user ID of the user to be identified by the nickname. You cannot use the :USERID tag with :LIST or :CC tags in the same nickname entry.

:LOG | :NOLOG
in the control section, indicates whether you want logging for any addressee specified by node and user ID and for any nickname that does not also specify :LOG or :NOLOG. If the nickname entry contains the :LOG or :NOLOG tag, this value overrides any value in the control section. However, it might have been overridden by a specification on the TRANSMIT command. If you specify NOLOG in your NAMES data set in the control section or on a :NICK tag, TSO/E prompts you with a message to receive data set 'A.MAIL.USERID'. TSO/E then stores and places the message in 'myid.MAIL.USERID' where *myid* is the receiver of the message and USERID is the originator of the message.

:LOGLST | :NOLOGLST
in the nickname entry, defines a distribution list. The tag indicates whether a log entry should be made for each addressee in the list.

:NAME.*user_name*
specifies the plain text name of the user being defined. This name appears in the copy list and in any log entries for this nickname. You can specify up to 30 characters.

:ADDR.*address*
in the nickname entry, specifies the address of the specified user. Separate individual lines of the address with semicolons.

:LIST.*name name_list*
in the nickname entry, specifies a list of addressees that make up the distribution list. Specify the addressee as either a nickname of the name or another distribution list. The :LIST tag can reference up to 100 nicknames. If you want to be notified for addressees on distribution lists, specify :NOTIFY on the distribution list in the control data set or specify NOTIFY(ALL) on the TRANSMIT command.

:CC.*name name_list*
specifies further nicknames of addressees for a distribution list. It is treated as a synonym of the :LIST tag. You can specify up to 100 nicknames.

:PARM.*text*
specifies up to 30 characters of installation-defined data. TSO/E passes this data to the RECEIVE command installation exits. For more information about how an installation uses these exits, see *OS/390 TSO/E Customization*.

TRANSMIT Command Examples

In the following examples, the transmitting user is assumed to have user ID USER1 on node NODEA and the receiving user is assumed to have user ID USER2 on node NODEB. The sending user has a NAMES data set as follows:

```
* Control section
:altctl.DEPT.TRANSMIT.CNTL
:prolog.Greetings from John Doe.
:prolog.
:epilog.
:epilog.Yours,:epilog.John Doe :epilog.NODEA.USER1
*
* Nicknames section.
*
:nick.alamo  :list.Jim Davy   :logname.alamo   :notify.
:nick.addrchg :list.joe davy jim  :nolog  :nonotify
:nick.Joe  :node.nodeb  :userid.user2    :name.Joe Doe
:nick.Me   :node.nodea  :userid.user1    :name.me
:nick.Davy :node.alamo  :userid.CROCKETT :name.Davy Crockett
:nick.Jim  :node.ALAMO  :userid.Bowie    :name.Jim Bowie
```

In the examples involving the RECEIVE command, data entered by the user appears in lowercase and data displayed by the system is in uppercase.

Example 1

Transmit a copy of the ‘SYS1.PARMLIB’ data set to Joe, identifying Joe by his node and user ID.

```
transmit nodeb.user2 da('sys1.parmlib')
```

Example 2

Joe receives the copy of ‘SYS1.PARMLIB’ transmitted above.

```
receive
Dataset SYS1.PARMLIB from USER1 on NODEA
Enter restore parameters or 'DELETE' or 'END' +
<null line>
Restore successful to dataset 'USER2.PARMLIB'
-----------------------------------------------
No more files remain for the RECEIVE command to process.
```

In the above example, Joe has issued the RECEIVE command, seen the identification of what arrived, and chosen to accept the default data set name for the arriving file. The default name is the original data set name with the high-level qualifier replaced by his user ID.

Example 3

Transmit two members of ‘SYS1.PARMLIB’ to Joe, and add a message identifying what was sent. Joe is identified by his NICKNAME, leaving it to TRANSMIT to convert it into node and user ID by the nicknames section of the NAMES data set.

```
transmit joe da('sys1.parmlib') mem(ieasys00,ieaips00) line
ENTER MESSAGE FOR NODEB.USER2
Joe,
   These are the parmlib members you asked me to send you.
They are in fact the ones we are running today.
Yours, John Doe
<null line>
```

The message text in this example was entered in line mode which would be unusual for a user on a 3270 terminal, but which is easier to show in an example.

Example 4

Joe begins the receive process for the members transmitted in Example 3 and ends the receive without actually restoring the data onto the receiving system, because Joe does not know where he wants to store the data.

```
receive
Dataset SYS1.PARMLIB  from USER1 on NODEA
Members: IEASYS00, IEAIPS00
Greetings from John Doe.
Joe,
   These are the parmlib members you asked me to send you.
They are in fact the ones we are running today.
Yours, John Doe
NODEA.USER1
Enter restore parameters or 'DELETE' or 'END' +
end
```

In the above example, notice that the PROLOG and EPILOG lines have been appended to the message entered by the sender. In an actual RECEIVE operation, the original message text would appear in both uppercase and lowercase just as the sender had entered it (assuming the receiver's terminal supports lowercase.)

Example 5

Joe receives the ‘SYS1.PARMLIB’ members transmitted in Example 3. Specify space parameters for the data set that will be built by RECEIVE to leave space for later additions.

```
receive
Dataset SYS1.PARMLIB from USER1 on NODEA
Members: IEASYS00, IEAIPS00
Greetings from John Doe.
Joe,
   These are the parmlib members you asked me to send you.
They are in fact the ones we are running today.
Yours, John Doe
NODEA.USER1
Enter restore parameters or 'DELETE' or 'END' +
da('nodea.parmlib') space(1) cyl dir(10)
Restore successful to dataset 'NODEA.PARMLIB'
---------------------------------------------
No more files remain for the RECEIVE command to process.
```

The received members IEASYS00 and IEAIPS00 are saved in the output data set with their member names unchanged.

Example 6

Send a message to a user on another system.

```
transmit davy
```

The system displays the following screen for input:

```
                    DATA FOR ALAMO.CROCKETT
0001   Davy,
0002     Did you check the report I gave you last week?
0003   Joe
0004
0005
  ⋮
```

Press PF3 to send the message.

In this example, the target user is identified by his nickname and no data set is specified, causing the terminal to be used as an input source. You can type your data, scroll using program function (PF) keys PF7 or PF19 and PF8 or PF20, and exit using PF3 or PF15, or cancel using the PA1 key.

Example 7

Send a member of a partitioned data set as a message and log the transmission in the data set CNFDNTL.MYLOG. In this example, the member MEETINGS of the partitioned data set MEMO.TEXT is sent as a message to JOE and this message is logged in ‘MIKE.CNFDNTL.MYLOG’.

```
transmit nodeb.joe msgds(memo.text(meetings))  logda(cnfdntl.mylog)
 INMX000I 0 message and 7 data records sent as 5 records to NODEB.JOE
 INMX001I Transmission occurred on 07/27/87 at 09:00:35.
READY
```

JOE receives the message in his data set MY.LOG, instead of the default log data set, LOG.MISC:

```
receive logds(my.log)
 INMR901I Dataset ** MESSAGE ** from MIKE on NODED
 THIS IS A SCHEDULE OF STATUS MEETINGS FROM AUGUST THROUGH NOVEMBER:

 AUGUST      MONDAYS AT 9:00 A.M. IN MY OFFICE
 SEPTEMBER   TUESDAYS AT 10:00 A.M. IN YOUR OFFICE
 OCTOBER     WEDNESDAYS AT 10:00 A.M. IN JACK'S OFFICE
 NOVEMBER    MONDAYS AT 2:00 P.M. IN JILL'S OFFICE
```

TSOEXEC Command

Use the TSOEXEC command to invoke an authorized command from an unauthorized environment. For example, you can use TSOEXEC when in the Interactive System Productivity Facility (ISPF), which is an unauthorized environment, to invoke authorized commands such as TRANSMIT and RECEIVE.

Three CLIST control variables are related to the use of the TSOEXEC command:

- &SYSABNCD contains the ABEND code.
- &SYSABNRC contains the ABEND reason code.
- &SYSCMDRC contains the command return code returned by the command most recently invoked by TSOEXEC.

For more information about these variables, see *OS/390 TSO/E CLISTs*.

These variables are changed slightly when used in REXX execs. They are as follows:

- SYSABNCD
- SYSABNRC
- SYSCMDRC

Note: Using TSOEXEC ISPSTART does not give a controlled environment. For information on controlled environments, see *OS/390 Security Server (RACF) Security Administrator's Guide*.

TSOEXEC Command Syntax

```
►►─TSOEXEC──┬──────────────┬──────────────────────────────────────►◄
            └─command_name─┘
```

TSOEXEC Command Operand

[*command_name***]**
specifies any TSO/E command the TSO/E service facility can invoke, whether or not the command is authorized or unauthorized.

TSOEXEC Command Return Codes

Figure 1-56. TSOEXEC Command Return Codes

0	Processing successful.
4	Processing completed, but the requested command returned a non-zero return code. It is in CLIST control variable &SYSCMDRC.
8	An attention interruption ended the requested command.
12	The requested command abnormally terminated. Its abend code and REASON code are in CLIST control variables &SYSABNCD and &SYSABNRC,; respectively.
24	System error.
28	The requested command is not a valid TSO/E command.

TSOEXEC Command Examples

Example 1

Operation: Use the TRANSMIT command to send a copy of a data set to another user while operating in ISPF.

Known:

- The user node: NODEB
- The user ID: USER2
- The data set name: SYS1.PARMLIB

```
TSOEXEC  TRANSMIT NODEB.USER2 DA('SYS1.PARMLIB')
```

TSOLIB Command

The TSOLIB command provides for an additional search level that TSO/E uses when searching for commands and programs. With TSOLIB, you specify load module libraries containing executable commands and programs, which are put to the top of the standard search order.

You can activate and deactivate the additional search level without leaving your TSO/E session. For the life of the additional search level the activated load module libraries serve as a task library to commands and programs you invoke.

This provides for flexible access to different versions of commands and programs, reduces the access time, and can simplify management of user IDs and LOGON procedures.

- The TSOLIB command, with its ACTIVATE operand, allows you to request access to load module libraries. The requested load module libraries will be put to the top of the system's search order for load module libraries.
- It allows you, with its DEACTIVATE operand, to remove these load module libraries from the search chain, thus, reestablishing the previous search order.
- The TSOLIB command allows for stacking multiple requests for load module libraries, making any further request to become the active one but keeping the previous requests stacked for later use. Every removal, respectively deactivation, of the currently active request reactivates the previous request. This allows for faster variation of your library search order without having to enter lengthy command strings.

  The stacking of multiple requests can be inhibited, thus ensuring that a request is performed only if no previous request is active.
- The DISPLAY operand of the TSOLIB command shows the currently active libraries being put to the top of the standard search order. If any library requests are stacked, they are shown as well.
- The RESET operand sets the search order back to its original state.

Search Order for Load Modules

The TSOLIB command is meant to provide a flexible way to extend the system's search order for commands and programs you invoke, or commands and programs invoked from other commands and programs.

For efficient use of the TSOLIB command you need to be aware of the search order, its variations through TSOLIB, and further variations by programs like ISPF that establish their own task libraries.

The Standard Search Order

Without having used the TSOLIB command, TSO/E searches for a command or program using the following sequence:

1. The step library or job library

   The user's LOGON procedure is checked for any //STEPLIB DD-card that specifies a user's load module library or list of libraries. If the module is found here, it will be executed.
2. The link pack area

The search is continued in the libraries specified in SYS1.PARMLIB member LPALSTnn. If the module is found here, it will be executed.

3. The link list concatenation

   The search is continued in the libraries specified in SYS1.PARMLIB member LNKLSTnn. The module should be found here.

Extending the Range of a Search with TSOLIB

With the first invocation of TSOLIB, you activate an additional search level and specify a load module library or a list of load module libraries. The specified libraries serve as a task library for further command and program invocations.

The system starts searching an invoked command or program in the task library you have activated. If a command or program is found in the newly activated libraries, it is executed; else the system follows the standard search order as described before.

The extended search order remains intact until one of the following happens:

- You reset the additional search level.

  The system will use the standard search order.

- You deactivate the additional search level.

  If you did not stack any previous requests, the system will use the standard search order.

  If a request has been stacked, the previously stacked request becomes active.

- You logoff from the session.

  After a new logon, the system will use the standard search order.

- You invoke an application, like ISPF, that places its own task libraries on top of the search order TSOLIB has set up.

  When that application completes, the search order TSOLIB has set up again becomes the top of the search chain.

Further Considerations

- Authorized Commands and Programs

  A load module library activated by the TSOLIB command can contain unauthorized and authorized commands and programs.

  Authorized commands and programs:

  – Must have been link-edited with an authorization code of 1

  – Must reside in an APF-authorized library

  – Must be listed on the AUTHCMD, AUTHPGM, AUTHTSF statements of SYS1.PARMLIB member IKJTSOxx

  before they can be invoked.

  If you intend for authorized commands or programs to be invoked authorized, then the entire concatenation of data sets must contain data set names that reside in the APF-authorized library list. This means that, if you activate a list of load modules libraries with TSOLIB, every data set name representing a library must be named in the APF-authorized library list.

- Direct entry from applications to TSO/E

  Several applications, like ISPF, allocate their own task libraries, for example ISPLLIB, to be on top of the search order that TSOLIB set up. However, applications also have a direct entry in to TSO/E environment. For example:

  – TSO/E service facility in an isolated environment

  – The TSO/E TSOEXEC command

  – Authorized commands and programs.

  These use the search order that TSOLIB has set up.

- Access permission to libraries

  If you have a security server active on your system, ensure that you are permitted access to the libraries TSOLIB is to activate.

Command Usage

The TSOLIB command with its ACTIVATE, DEACTIVATE, and RESET operands is intended to be issued from TSO/E READY mode, either in the foreground or in the background. The requested extension on the search order becomes effective when TSO/E READY mode processes its next command. If the TSOLIB command is issued from any other environment, like ISPF or REXX, only the TSOLIB command with its DISPLAY operand is valid.

THE TSOLIB command may be used from a CLIST or from a REXX exec, with considerations to the READY environment. For more information, see “TSOLIB Command Examples” on page 1-385.

Stacking Load Module Library Requests

Requests to activate load module libraries into the search chain can be stacked. You control this with the COND and UNCOND operands of the TSOLIB command.

By default, a request to activate libraries is done unconditionally. The request becomes the current and active one. Any previous request (if one was issued) is stacked and temporarily made inactive. The next request to *deactivate* libraries will remove the current and active one from the search chain and re-activate the previous request (if there was one).

If a request is made conditionally, by using the COND keyword operand, the request will not become active if any previous activation took place before. See “TSOLIB Command Examples” on page 1-385 for a detailed example on how to stack load module library requests.

TSOLIB Command Syntax

```
>>-TSOLIB-------------------------------------------------------------->
>-+-+-ACTIVATE-+-+-+-DATASET(--,--dsname--(1)--)-+-+-+-UNCOND-+-+-------->
  | | ACT------| | | DSNAME(--,--dsname--(2)--)-| | COND---| |
  | | | | | | | | | | | | | | | | | | | | | | | | | | |
```

command. The *ddname* remains allocated even after a TSOLIB DEACTIVATE or RESET command is issued. Use the FREE command to deallocate the ddname when required.

For authorized commands and programs to be invoked from a library read "Further Considerations" on page 1-380.

Using a *ddname*, compared to a *dsname* or a list of *dsname*s, allows for a greater number of libraries to be activated. Use the ALLOCATE command to associate up to 255 data sets with a *ddname*; then issue `TSOLIB ACTIVATE FILE(ddname)`.

UNCOND | COND
controls the way TSOLIB is to treat an ACTIVATE request if previous requests have been performed.

UNCOND (the default) indicates that the activation request is to be done unconditionally. Any active request is temporarily deactivated and stacked for later re-activation. See "Stacking Load Module Library Requests" on page 1-381 for more information about stacking library activation requests, and "TSOLIB Command Examples" on page 1-385.

Note that stacked ddnames remain allocated. See also the description about the DATASET and FILE operands.

COND indicates that the activate request is to be successful if no other request is active. Otherwise, the activate request is unsuccessful, a message is displayed, and a non-zero return code is set.

RESET | RES
excludes *all* specified libraries, set with the ACTIVATE operand, back to the standard search order. The search order for library load modules is now the same as it was before any TSOLIB command was given.

DISPLAY | DISP | DIS
issues information about the currently activate *ddname* that is in front of the standard search order and those still on the stack, which will become the active ones, one after the other, with each following TSOLIB DEACTIVATE command.

If other task libraries became active after TSOLIB activated a library, for example, ISPF was started with ISPLLIB, the DISPLAY operand issues information about the situation.

QUIET
indicates that you do not want messages from this invocation of the TSOLIB command displayed.

The QUIET operand is primarily intended for programs under ISPF that invoke the TSOLIB command. The programs need access to the messages that TSOLIB issues, but will not want to display them. Trapping of messages is not available, and &SYSOUTTRAP cannot be used in a program.

If ISPF is active, the messages are saved in ISPF shared pool variables:

- Variable IKJTSM contains the number of non-blank messages being returned from this invocation of the TSOLIB command with the QUIET operand.

- Variable IKJTSM1 contains the first message, IKJTSM2 the second message, and so on. Up to 99 messages are saved in variables IKJTSM1 through IKJTSM99.

  The variables contain the actual messages that TSOLIB would have displayed if invoked without the QUIET operand. The lengths of the messages are not restricted to 80 characters.

The ISPF shared pool variables are only set when needed. They are not blanked out when not needed.

QUIET does not take effect until after the content of the command buffer, holding this invocation of the TSOLIB command, is known to be syntactically correct. If the command parser finds an error, or needs to prompt for input, it will issue messages and obtain input from the terminal as necessary.

Note: Do not use the QUIET option of TSOLIB in the IPCS dialog. IPCS does not make ISPF services available to TSO/E commands that IPCS invoke.

If you invoke the TSOLIB command without specifying an operand, TSOLIB will assume the ACTIVATE and DATASET operands and prompt you for the missing information. Note that prompting restricts you to a single data set name. You cannot enter a list of *dsname*s.

Operands may be abbreviated by entering only the significant characters. However, the abbreviations shown are recommended for clarity reasons.

TSOLIB Command Return Codes

Figure 1-57. TSOLIB Command Return Codes

0	Processing successful. A load module library, or a list of load module libraries, has been successfully activated, deactivated, or reset. However, informational messages may have been issued, for example, `IDY00020I Unable to free previously allocated data sets. Enter ? for more information.`
4	A TSOLIB library does not exist for this type (when deactivating a TSOLIB library).
8	A load module library already exists for this type when the COND operand is used.
16	The load module library specified with the TSOLIB ACTIVATE command was not previously allocated.
20	Severe error. More information is contained in the messages.
24	Internal processing error. TSOLIB is either unable to establish a recovery environment or encountered an error processing a TSOLIB installation exit.
28	Environment error. TSOLIB was not invoked in a TSO/E READY environment.
32	Environment error. TSOLIB was not invoked as a command processor.

TSOLIB Command Examples

Example: Activate a Single Data Set

Operation: Activate a single data set `'sys3.loadlib1'` using the ACTIVATE DATASET operand of TSOLIB. Use the TSOLIB DISPLAY operand to display the current search order. Assume no previous request has been issued before.

```
TSOLIB ACTIVATE DATASET('sys3.loadlib1')
TSOLIB DISPLAY
IDY00022I Search order (by DDNAME) is:
IDY00023I DDNAME = SYS00101
```

Note that the system has created a ddname of SYS00101 for the activated load module library.

Example: Activate a Concatenation of Data Sets

Operation: Activate data sets `'sys3.loadlib1'` and `'sys3.testlib'` using the ACTIVATE DATASET operand of TSOLIB. Use the TSOLIB DISPLAY operand to display the current search order. Assume no previous request has been issued before.

```
TSOLIB ACTIVATE DATASET('sys3.loadlib1' 'sys3.testlib')
TSOLIB DISPLAY
IDY00022I Search order (by DDNAME) is:
IDY00023I DDNAME = SYS00101
```

Note that the system has created a ddname of SYS00101 for the concatenated load module libraries.

Example: Activate an Allocated File

Operation: (1) Allocate data set *my.load* and specify the ddname `aalib` to be associated with it, (2) activate ddname `aalib` with the TSOLIB ACTIVATE command, and (3) use the TSOLIB DISPLAY command to display to current search order. Assume no previous request has been issued before.

```
ALLOCATE FILE(aalib) DATASET(my.load)
TSOLIB ACTIVATE FILE(aalib)
TSOLIB DISPLAY
IDY00022I Search order (by DDNAME) is:
IDY00023I DDNAME = AALIB
```

Example: Activate a Data Set from within a CLIST

Operation: Activate data set `'JIM.LOAD'` from within a CLIST running in TSO/E READY environment.

```
PROC 0
TSOLIB ACTIVATE DATASET('JIM.LOAD')
IF &LASTCC = 0 THEN +
   ... process commands and programs from TSOLIB data set.
  ⋮
```

Example: Activate an Allocated File from within a REXX Exec

Operation: (1) Allocate data set `'JIM.LOAD'` and specify the ddname `MYLOAD` to be associated with it, (2) activate ddname `aalib` with the TSOLIB ACTIVATE FILE command. Note that the REXX exec is to run in a TSO/E READY environment.

```
/* rexx */
"ALLOCATE FILE(MYLOAD) DATASET('JIM.LOAD') SHR"
if RC = 0 then
    push "TSOLIB ACTIVATE FILE(MYLOAD)"
exit
  ⋮
   ... back in TSO/E READY environment, start the REXX exec
  ⋮
   ... invoke commands and programs from TSOLIB data set.
  ⋮
```

Example: The Use of TSOLIB Library Stacking

Operation: Activate data set `'sys3.loadlib1'` using the ACTIVATE DATASET operand of TSOLIB. Use the TSOLIB DISPLAY operand to display the current search order. Assume no previous request has been issued before.

```
TSOLIB ACTIVATE DATASET('sys3.loadlib1')
TSOLIB DISPLAY
IDY00022I Search order (by DDNAME) is:
IDY00023I DDNAME = SYS00101
```

Note that the system has created a ddname of SYS00101 for the activated load module library.

Operation: Activate another data set `'sys3.loadlib2'` using the ACTIVATE DATASET operand of TSOLIB. Use the TSOLIB DISPLAY operand to display the currently active and stacked ddnames.

```
TSOLIB ACTIVATE DATASET('sys3.loadlib2')
TSOLIB DISPLAY
IDY00022I Search order (by DDNAME) is:
IDY00023I DDNAME = SYS00102
IDY00024I DDNAME = SYS00101 (Stacked)
```

Note that the system has created a ddname of SYS00102 for the activated load module library. The previously activated ddname SYS00101 is temporarily deactivated and marked (Stacked).

Operation: (1) Allocate a third data set *my.load* and specify the ddname `aalib` to be associated with it, (2) activate ddname `aalib` with the TSOLIB ACTIVATE command, and (3) use the TSOLIB DISPLAY command to display the currently active and stacked ddnames.

```
ALLOCATE FILE(aalib) DATASET(my.load)
TSOLIB ACTIVATE FILE(aalib)
TSOLIB DISPLAY
IDY00022I Search order (by DDNAME) is:
IDY00023I DDNAME = AALIB
IDY00024I DDNAME = SYS00102 (Stacked)
IDY00024I DDNAME = SYS00101 (Stacked)
```

The previously activated ddname SYS00102 is temporarily deactivated and marked (Stacked) in addition to SYS00101. Ddname AALIB is the active library included ahead of the standard search order.

Example: The Use of the TSOLIB COND Operand

Operation: Based on “Example: The Use of TSOLIB Library Stacking” on page 1-386, try to activate ddname `trylib` with the COND operand.

```
ALLOCATE FILE(trylib) DATASET(your.load)
TSOLIB ACTIVATE FILE(trylib) COND
IDY00015I TSOLIB terminated.  Load library already active
          and COND keyword was specified.
  ⋮
TSOLIB DISPLAY
IDY00022I Search order (by DDNAME) is:
IDY00023I DDNAME = AALIB
IDY00024I DDNAME = SYS00102 (Stacked)
IDY00024I DDNAME = SYS00101 (Stacked)
```

The activate request is unsuccessful; the previous activation remains unchanged.

Example: Reactivate a TSOLIB Library from the Stack

Operation: Based on “Example: The Use of TSOLIB Library Stacking” on page 1-386, (or “Example: The Use of the TSOLIB COND Operand”) exclude the currently active library AALIB and activate the last one stacked (SYS00102).

```
TSOLIB DEACTIVATE
TSOLIB DISPLAY
IDY00022I Search order (by DDNAME) is:
IDY00023I DDNAME = SYS00102
IDY00024I DDNAME = SYS00101 (Stacked)
```

Example: The Use of the TSOLIB QUIET Operand

Operation: (1) Activate a single data set `'aalib.load'`, to which the system associates a ddname of SYS00100, (2) activate a concatenation of data sets, to which the system associates a ddname of SYS00101, (3) and invoke a REXX exec to show use of the QUIET operand when ISPF is active.

The contents of the variables in the ISPF shared pool are then examined. Assume no previous request has been issued before.

```
READY
TSOLIB ACTIVATE DATASET(mylib.load)
TSOLIB ACTIVATE DATASET('sys3.loadlib1' 'sys3.testlib')
```

Invoke the following REXX exec when ISPF is active:

```
/* rexx */
ADDRESS TSO
"TSOLIB DISPLAY QUIET"
  ⋮
```

The ISPF shared pool variables are now set as follows:

Variable	Content
IKJTSM	4
IKJTSM1	TSOLIB DISPLAY QUIET
IKJTSM2	IDY00022I Search order (by DDNAME) is:
IKJTSM3	IDY00023I DDNAME = SYS00101
IKJTSM4	IDY00024I DDNAME = SYS00100 (Stacked)

VLFNOTE Command

When you change data that is shared across systems and managed by the virtual lookaside facility (VLF), you might need to enter the VLFNOTE command to notify VLF of the change. VLF needs to know when you make changes to the data it manages so that it can make current data available for users. The types of data VLF manages are:

- Data in a partitioned data set (PDS)
- A named collection of data (non-PDS).

The type of data and the system environment determine whether you need to enter VLFNOTE.

You do not need to use VLFNOTE (because notification to VLF is automatic) when both of the following are true:

- VLF is running on MVS/ESA systems and are part of a single sysplex.
- The changed data belongs to a PDS class.

When both conditions are true, VLF receives notification automatically through sysplex services. (*OS/390 MVS Setting Up a Sysplex*, describes running VLF in a sysplex.) Otherwise, you need to enter VLFNOTE.

The types of changes that require VLF notification are listed below:

For data in a PDS, enter VLFNOTE when you are:

- Adding a member to an eligible data set (a data set that is identified to VLF).
- Adding a member to a non-eligible data set when both of the following are true:
  - The new member is in a user's SYSPROC concatenation ahead of an eligible data set.
  - The eligible data set has a member with the same name as the new member.
- Updating an existing member of an eligible data set.
- Deleting an eligible data set or member of an eligible data set.

To notify VLF about changes to data in a PDS, use the VLFNOTE command syntax described in “Changing Data Associated with a Partitioned Data Set” on page 1-389.

For non-PDS data, use VLFNOTE when you are:

- Adding a minor name to a major name.
- Updating a minor name associated with a major name.
- Deleting a minor name from a major name.

To notify VLF about changes to non-PDS data, use the VLFNOTE command syntax described in “Changing Non-PDS Data” on page 1-390.

There are several ways to issue the VLFNOTE command. Depending on the method available at your installation you can:

- Logon to each of the other systems in your complex and enter VLFNOTE.

- Send a message to users on each of the other systems in your complex and have them enter VLFNOTE.
- Submit a short batch job, with system affinity, to each of the other systems in your complex and issue VLFNOTE in the job.
- If your installation is using APPC/MVS, write an APPC/MVS transaction program to prompt the affected systems to issue the VLFNOTE command. Each of the affected systems must have an APPC/MVS transaction program that will issue the VLFNOTE command.

See *OS/390 MVS Programming: Authorized Assembler Services Guide*, for more information about VLF notification.

Changing Data Associated with a Partitioned Data Set

Use the following syntax to notify VLF that you have changed a partitioned data set. To notify VLF that you have changed non-PDS data, see “Changing Non-PDS Data” on page 1-390 for the correct syntax.

Note: For partitioned data set changes, the VLFNOTE command needs to be issued on each system in the shared DASD complex, except for the system on which the change was made. VLF is automatically notified on the system on which the change was made.

VLFNOTE Command Syntax (Partitioned Data Set)

```
►►─VLFNOTE──┬─ADD────┬──┬─DATASET(partitioned_data_set_name)─┬──────────────►
            ├─DELETE─┤  └─DSNAME(partitioned_data_set_name)──┘
            └─UPDATE─┘

►──┬─────────────────┬──┬──────────────────────────────────────────────────►◄
   └─(member_name)───┘  └─VOLSER(volume_serial)──────────────────────────────┘
```

VLFNOTE Command Operands (Partitioned Data Set)

ADD
specifies that you have added a member to a partitioned data set.

DELETE
specifies that you have deleted a partitioned data set or a member of a partitioned data set.

UPDATE
specifies that you have updated a member of a partitioned data set.

DATASET | DSNAME (*partitioned_data_set_name***[(***member_name***)])**
specifies the name of the partitioned data set that you changed. Include the member name if you have added, deleted or updated a member.

VOLSER(*volume_serial***)**
specifies the volume on which the changed partitioned data set resides. If you do not include VOLSER, VLF uses the catalog to determine the volume serial where the data set resides.

VLFNOTE Command Examples (Partitioned Data Set)

Example 1

Operation: Notify VLF that you deleted member MAKEMEMO of partitioned data set ‘COMMON.TOOLS.CLIST’

```
vlfnote delete dataset(‘common.tools.clist(makememo)’)
```

Example 2

Operation: Notify VLF that you renamed a member, X, of a CLIST data set “YOURID.TAILORED.CLIST”. It is now called NEWX. Delete the old member name and add the new member name.

```
vlfnote delete dataset(tailored.clist(X))
```

and

```
vlfnote add dataset(tailored.clist(newx))
```

Changing Non-PDS Data

Use this syntax to notify VLF that you changed non-PDS data (data that belongs to a CLASS-MAJOR or CLASS-MAJOR-MINOR combination). The specified class name must be an installation-supplied class name. To notify VLF that you changed a partitioned data set see “Changing Data Associated with a Partitioned Data Set” on page 1-389 for the correct syntax.

VLFNOTE Command Syntax (Non-PDS)

```
►►──VLFNOTE──┬─ADD────┬──CLASS(class_name)──MAJOR(major_name)──────────►
             ├─DELETE─┤
             └─UPDATE─┘

►──MINOR(minor_name)──────────────────────────────────────────────────►◄
```

VLFNOTE Command Operands (Non-PDS)

ADD
specifies that you have added a minor name to a major name.

DELETE
specifies that you have deleted a minor name from a major name or that you have deleted a major name from an installation-supplied class.

UPDATE
specifies that you have updated a minor name associated with a major name.

CLASS(*class_name*)
specifies the name of an installation-supplied class (class name beginning with a letter from H - Z) affected by the change you made.

MAJOR(*major_name*)
specifies the major name associated with the change you made.

MINOR(*minor_name*)
specifies the minor name associated with the change you made.

VLFNOTE Command Examples (Non-PDS)

Example 1

Operation: Notify VLF that non-PDS data has been deleted.

```
vlfnote delete class(myclass1) major(major1) minor(minor1)
```

Example 2

Operation: Notify VLF that you deleted major name “NOTICE”, of the installation-supplied class “MYCLASS”.

```
vlfnote delete class(myclass) major(notice)
```

VLFNOTE Command Return Codes

Figure 1-58. VLFNOTE Command Return Codes

0	Processing successful.
12	Return code 12 means one of the following: • Incorrect syntax was specified for the command. • The invoked VLF function returned a non-zero return code. • The TSO/E parse service routine or the TSO/E catalog information routine returned a non-zero return code. • Unauthorized for specific request. Error messages indicate the exact problem.

WHEN Command

Use the WHEN command to test return codes from programs invoked by an immediately preceding CALL or LOADGO command, and to take a prescribed action if the return code meets a certain specified condition.

WHEN Command Syntax

```
►►──WHEN──SYSRC(operator integer)──┬─END──────────┬──────────────────────────►◄
                                   └─command_name─┘
```

WHEN Command Operands

SYSRC
specifies the return code from the previous function (the previous command in the CLIST) is to be tested according to the values specified for operator and integer.

operator
specifies one of the following operators:

```
EQ or  = means equal to
NE or  ¬= means not equal to
GT or  > means greater than
LT or  < means less than
GE or  >= means greater than or equal to
NG or  ¬> means not greater than
LE or  <= means less than or equal to
NL or  ¬< means not less than
```

integer
specifies the numeric constant that the return code is to be compared to.

END
specifies processing is to be terminated if the comparison is true. If you do not specify a command, END is the default.

command_name
specifies any valid TSO/E command name and appropriate operands. If the comparison is true, TSO/E processes the command.

WHEN terminates CLIST processing and then executes the TSO/E command name specified.

Use successive WHEN commands to determine an exact return code and then perform some action based on that return code.

WHEN Command Return Code

The return code is from the command that executed last.

WHEN Command Examples

Example 1

Operation: Use successive WHEN commands to determine an exact return code.

```
CALL     compiler
WHEN     SYSRC(= 0) EXEC LNKED
WHEN     SYSRC(= 4) EXEC LNKED
WHEN     SYSRC(= 8) EXEC ERROR
```

Chapter 2. Session Manager Commands

Entering Session Manager Commands . . . 2-3
Command Format . . . 2-3
Session Manager Command Syntax . . . 2-4
Defaults . . . 2-4
Abbreviations . . . 2-4
Session Manager Command Summary . . . 2-5
CHANGE.CURSOR Command . . . 2-7
  CHANGE.CURSOR Command Syntax . . . 2-7
  CHANGE.CURSOR Command Operands . . . 2-7
  CHANGE.CURSOR Command Return Codes . . . 2-7
  CHANGE.CURSOR Command Examples . . . 2-8
CHANGE.FUNCTION Command . . . 2-8
  CHANGE.FUNCTION Command Syntax . . . 2-8
  CHANGE.FUNCTION Command Operands . . . 2-9
  CHANGE.FUNCTION Command Return Codes . . . 2-10
  CHANGE.FUNCTION Command Examples . . . 2-10
CHANGE.MODE Command . . . 2-11
  CHANGE.MODE Command Syntax . . . 2-11
  CHANGE.MODE Command Operands . . . 2-11
  CHANGE.MODE Command Return Codes . . . 2-11
  CHANGE.MODE Command Examples . . . 2-11
CHANGE.PFK Command . . . 2-12
  CHANGE.PFK Command Syntax . . . 2-12
  CHANGE.PFK Command Operands . . . 2-12
  CHANGE.PFK Command Return Codes . . . 2-13
  CHANGE.PFK Command Examples . . . 2-13
CHANGE.STREAM Command . . . 2-13
  CHANGE.STREAM Command Syntax . . . 2-14
  CHANGE.STREAM Command Operands . . . 2-14
  CHANGE.STREAM Command Return Codes . . . 2-14
  CHANGE.STREAM Command Examples . . . 2-14
CHANGE.TERMINAL Command . . . 2-14
  CHANGE.TERMINAL Command Syntax . . . 2-15
  CHANGE.TERMINAL Command Operands . . . 2-15
  CHANGE.TERMINAL Command Return Codes . . . 2-15
  CHANGE.TERMINAL Command Examples . . . 2-15
CHANGE.WINDOW Command . . . 2-16
  CHANGE.WINDOW Command Syntax . . . 2-16
  CHANGE.WINDOW Command Operands . . . 2-16
  CHANGE.WINDOW Command Return Codes . . . 2-18
  CHANGE.WINDOW Command Examples . . . 2-18
DEFINE.WINDOW Command . . . 2-18
  DEFINE.WINDOW Command Syntax . . . 2-18
  DEFINE.WINDOW Command Operands . . . 2-19
  DEFINE.WINDOW Command Return Codes . . . 2-21
  DEFINE.WINDOW Command Examples . . . 2-21
DELETE.WINDOW Command . . . 2-22
  DELETE.WINDOW Command Syntax . . . 2-22
  DELETE.WINDOW Command Operands . . . 2-22
  DELETE.WINDOW Command Return Codes . . . 2-22

© Copyright IBM Corp. 1988, 1999

DELETE.WINDOW Command Examples 2-22
END Command 2-22
END Command Syntax 2-23
FIND Command 2-23
FIND Command Syntax 2-23
FIND Command Operands 2-23
FIND Command Return Codes 2-24
FIND Command Examples 2-24
PUT Command 2-25
PUT Command Syntax 2-25
PUT Command Operands 2-25
PUT Command Return Codes 2-26
PUT Command Examples 2-26
QUERY Command 2-26
QUERY Command Syntax 2-26
QUERY Command Operands 2-26
QUERY Command Return Codes 2-28
QUERY Command Examples 2-28
RESET Command 2-30
RESET Command Syntax 2-30
RESET Command Return Codes 2-30
RESTORE Command 2-30
RESTORE Command Syntax 2-31
RESTORE Command Operands 2-31
RESTORE Command Return Codes 2-32
RESTORE Command Examples 2-32
SAVE Command 2-32
SAVE Command Syntax 2-32
SAVE Command Operands 2-32
SAVE Command Return Codes 2-33
SAVE Command Examples 2-33
SCROLL Command 2-33
SCROLL Command Syntax 2-34
SCROLL Command Operands 2-34
SCROLL Command Return Codes 2-36
SCROLL Command Examples 2-36
SNAPSHOT Command 2-36
SNAPSHOT Command Syntax 2-36
SNAPSHOT Command Operands 2-36
SHAPSHOT Command Return Codes 2-37
SHAPSHOT Command Examples 2-37
UNLOCK Command 2-37
UNLOCK Command Syntax 2-37
UNLOCK Command Operands 2-37
UNLOCK Command Return Codes 2-38
UNLOCK Command Examples 2-38

This chapter describes the functions and syntax of each Session Manager command. It includes:

- The general format and syntax rules for the commands.
- A description of the function and syntax for each command. The commands are described in alphabetical order.

Introductory information about how to use and start Session Manager at your terminal is described in *OS/390 TSO/E User's Guide*.

Entering Session Manager Commands

You can enter Session Manager commands by:

- Pressing the CLEAR key and entering a command anywhere on the screen
- Pressing a program function (PF) key set up to issue a command
- Executing a TSO/E CLIST, which contains commands
- Defining the command as the text_string of the SMPUT command

Regardless of how you enter the commands, the following rules apply:

- You can enter multiple Session Manager commands on one line provided you separate them with a semicolon (;). The number of characters on any one line cannot exceed 512. When multiple commands are entered on a line, an error in one command does not prevent the remaining commands from executing.
- In order for a Session Manager command to execute, it must be placed in the SMIN stream.
- Any change you make to the definitions of the windows, cursor, PF keys, session functions, streams, or the terminal, remain in effect for your terminal session. You can place these definitions in a CLIST to be executed each time you log on.

Command Format

A Session Manager command consists of a *command name*, usually followed by a *command modifier* and one or more *operands*.

A command name is typically a familiar English word that describes the function of the command. Some command names are followed by command modifiers, which qualify the action of the command name.

Operands provide specific information about how an operation is to be performed. The two types of operands used with Session Manager commands are *positional* and *keyword*.

`command.modifier`	one or more blanks	`operand, operand, ...`

You must separate the command name and command modifier with a period or one or more blanks. Also separate the command or command modifier from the first operand by one or more blanks.

The command descriptions include some operands in lowercase letters and some in uppercase letters. If the operand is in lowercase letters, you must substitute a specific value for the letters. For example, in the command

```
CHANGE.PFK pfk_number ...
```

you must replace *pfk_number* with the number of the program function (PF) key to be changed.

```
CHANGE.PFK 1 ...
```

Lowercase operands are *positional* operands because they follow the command names or modifiers in a prescribed order.

The operands in uppercase letters are *keyword* operands. You must type those operands as shown. For example:

```
ALARM(ON)
```

```
CONTROL(seconds)
```

Both of the preceding keyword operands have subfield values enclosed in parentheses. You must type the keyword (or its abbreviation), a left parenthesis, and then the subfield value. You can omit the closing parenthesis if it is the last character of the command.

The ALARM keyword shows the only possible subfield value within the parentheses.

The CONTROL operand shows the subfield value in lowercase letters. Therefore, you are to substitute a value for the lowercase name.

Session Manager Command Syntax

The command syntax for Session Manager commands is represented using structured diagrams. This method of syntax representation is described in “How to Read the TSO/E Command Syntax” on page 1-12.

Defaults

To make the commands easier to enter, certain operands default to a specific value. If the default value is the value you want to use, you do not have to enter the operand. The default values are underlined in the syntax description for each command.

Many Session Manager commands refer to a *default window*. The default window is the MAIN window or the window you have assigned as the default window via the CHANGE.TERMINAL command.

Abbreviations

You can abbreviate nearly all Session Manager command names, modifiers, and keyword operands. These abbreviations can be as short as possible, while still providing uniqueness among them. For example, the minimum abbreviation for the DELETE command is:

```
DEL
```

DEL distinguishes DELETE from the DEFINE command.

The exceptions to this rule are the following frequently used commands:

```
DEFINE    D
SCROLL    S
RESTORE   R
```

You can also abbreviate any keyword operand. For example, the keyword operands of the CHANGE.WINDOW command and their minimum abbreviations are:

```
ALARM     A
HOLD      H
OVERLAP   O
PROTECT   P
TARGET    T
UPDATE    U
VIEW      V
```

The Session Manager also accepts the following commonly used abbreviations:

```
CONTROL   CNTL
FORMAT    FMT
```

Session Manager Command Summary

Figure 2-1 summarizes the Session Manager commands and their functions.

Figure 2-1 (Page 1 of 2). Summary of the Session Manager Commands

Command	Function
CHANGE.CURSOR	Changes the permanent or temporary location of the cursor.
CHANGE.FUNCTION	Changes whether the terminal's audible alarm is to sound when information enters an input or output stream.
	Specifies whether information from an input stream is to be copied to an output stream and the intensity at which the information is to be displayed.
	Specifies the input stream for a session function.
	Specifies the output stream for a session function and the intensity at which the information is to be displayed.
CHANGE.MODE	Indicates whether you want to run under VS/APL or under the Session Manager.
CHANGE.PFK	Changes the definition of a program function (PF) key.
CHANGE.STREAM	Specifies whether the terminal's audible alarm is to sound when information enters a given stream.
	Erases all of the information in a given stream.
CHANGE.TERMINAL	Specifies whether the terminal's audible alarm is to sound when the keyboard unlocks.
	Specifies the maximum time the keyboard is to be locked while a command is executing.
	Changes the default window.

Figure 2-1 (Page 2 of 2). Summary of the Session Manager Commands

Command	Function
CHANGE.WINDOW	Specifies whether the terminal's audible alarm is to sound when the Session Manager scrolls a window to display new information. Specifies how long a window is to be held in place before the Session Manager scrolls it. Specifies how many lines of a window's old position are to be repeated when the window scrolls to a new position. Specifies whether information can be entered in a window. Indicates the name of the stream that is to receive the information in a window and the intensity at which the information is to be displayed. Indicates how much new information must enter a stream before the window scrolls to display it. Specifies the name of the stream a window is to display.
DEFINE.WINDOW	Defines a new window on the display screen.
DELETE.WINDOW	Deletes a window from the display screen.
END	Ends Session Manager support of your TSO/E session.
FIND	Searches for a text string in a stream that is currently displayed by a window. Finds the number of the top line being displayed by a window.
PUT	Places a text string in a stream and indicates the intensity at which the text string is to be displayed.
QUERY	Displays information about: • TSO, SM, and MSG functions • Program function (PF) keys • Streams • Terminal • Windows
RESET	Restarts the Session Manager display environment.
RESTORE	Restores the definitions of the following, which were saved via the SAVE command: • Program function (PF) keys • Screen layout • Windows
SAVE	Saves the definitions of the following: • Program function (PF) keys • Screen layout • Windows
SCROLL	Moves a window over a stream.
SNAPSHOT	Copies a display screen of information into a stream.
UNLOCK	Unlocks a window.

CHANGE.CURSOR Command

Use the CHANGE.CURSOR command to change the location of the cursor on the display screen. You can establish a *permanent* or *temporary* location for the cursor.

If you define a permanent location, the cursor returns to that location each time you press a program function (PF) key, the Enter key, the attention (PA1) key, the CLEAR key or the cancel (PA2) key. If you define a temporary location, the cursor moves to and remains at that location until the next keyboard entry. After the keyboard entry, the cursor moves to the permanent location.

CHANGE.CURSOR Command Syntax

```
                                                   ┌default_window┐
►►──┬CHANGE.CURSOR┬──┬──┬─┬─1───┬─┬─1───────┬─┬──┴window_name────┴──►
   ├C.C──────────┤  │  │ │row  │ │column   │ │
   └C C──────────┘  │  └─┴─────┴─┴─────────┴─┴
►──┬──────────┬──────────────────────────────────────────────────►◄
   └TEMPORARY─┘
```

CHANGE.CURSOR Command Operands

row column

The location in the specified window where the cursor is to go. The *row* and *column* numbers are relative to those in the window, not the entire display screen. If you specify a number for *row* that is greater than the number of lines in the window, the Session Manager uses the last row in the window. If you specify a number for *column* that is greater than the number of columns in the window, the Session Manager adjusts the column value to the number of columns in the window minus one. If you specify 0 or a negative number for *row* or *column*, the Session Manager places the cursor in the first row and column in the window.

window_name

The name of the window where the cursor is to be placed.

TEMPORARY

specifies that this change to the cursor location is to be temporary. If both the row and column and window_name operands are omitted, and a temporary location for the cursor was previously set, the Session Manager moves the cursor to that location. If a temporary location was not previously set, the Session Manager moves the cursor to the upper left hand corner of the display screen.

Unless you specify TEMPORARY, the change is permanent.

CHANGE.CURSOR Command Return Codes

Figure 2-2. CHANGE.CURSOR Command Return Codes

0	Processing successful.
4	Syntax error in command.
8	Window not found.

CHANGE.CURSOR Command Examples

Example 1

Set the permanent location of the cursor to row 5, column 3 of the TEST window.

```
change.cursor 5 3 test
```

Example 2

Set the temporary location of the cursor to row 2, column 1 of the ENTRY window.

```
change.cursor 2 1 entry temporary
```

Example 3

Set the cursor to the temporary location that was set in a previous CHANGE.CURSOR command.

```
change.cursor temporary
```

Example 4

Change the permanent location of the cursor to row 1, column 1 of the default window.

```
change.cursor
```

CHANGE.FUNCTION Command

Use the CHANGE.FUNCTION command to:

- Change whether the terminal's audible alarm is to sound when information enters an input or output stream
- Specify whether information from an input stream is to be copied to an output stream and the intensity at which the information is to be displayed
- Specify the input stream for the TSO, Session Manager (SM), or message (MSG) functions
- Specify the output stream for a session function and the intensity at which the information is to be displayed

CHANGE.FUNCTION Command Syntax

```
►►──┬─CHANGE.FUNCTION─┬──────────────────────────────────────────►
    ├─C.F─────────────┤
    └─C F─────────────┘

►──┬─┬─MSG─┬─┬──────────────────────────────────────────────────┬──►
   │ ├─SM──┤ │                                                  │
   │ └─TSO─┘ └─OUTPUT(stream_name─┬─1─────────────┬─)─┘          │
   │                              └─intensity─────┘              │
   └─┬─SM──┬─┬──────────────────────┬─┤ Copy ├──────────────────┘
     └─TSO─┘ └─INPUT(stream_name)───┘

►──┬──────────────────────────────────────────────────────────►◄
   └─ALARM(──┬─INPUT──┬─)─┘
             ├─OUTPUT─┤
             └─NO─────┘
```

Copy:

```
├──┬──────────────────────────────────────────────────────────┬──┤
   │                                                          │
   ├─COPY(stream_name─┬─1─────────────┬─)──────────────────────┤
   │                  └─intensity─────┘                        │
   └─NOCOPY───────────────────────────────────────────────────┘
```

CHANGE.FUNCTION Command Operands

MSG
requests that the change apply to the message (MSG) function. The MSG function represents the messages from other TSO/E users, the operator, and background jobs.

SM
requests that the change apply to the Session Manager (SM) function. The SM function represents work related to the Session Manager.

TSO
requests that the change apply to the TSO function. The TSO function represents work related to TSO.

OUTPUT(*stream_name intensity***)**

stream_name The name of the output stream for the specified function.

intensity specifies the brightness at which the information is to be displayed in the output stream. The valid values are:

1 The information is to be displayed at normal intensity.
2 The information is to be highlighted.

INPUT(*stream_name***)**
The name of the input stream for the specified function.

COPY(*stream_name intensity***) | NOCOPY**

COPY(*stream_name intensity***)** requests that the Session Manager copy the input stream for this function into an output stream.

stream_name is the name of the output stream that is to contain a copy of the information from the input stream.

intensity specifies the brightness at which the copied information is be displayed. The valid values are:

0 The copied information is not to be displayed. You can see the line that the information occupies, but the information itself is invisible.

1 The copied information is to be displayed at normal intensity.

2 The copied information is to be highlighted.

NOCOPY specifies that the Session Manager is not to copy the information from the input stream into an output stream.

ALARM(INPUT | OUTPUT | NO)
specifies whether the terminal's audible alarm is to sound when information enters a stream. The stream does not have to be currently displayed for the alarm to sound. You can set ALARM to sound for either the input stream or the output stream, but not both.

Note: If your terminal does not have an audible alarm, the Session Manager still accepts this operand. It has no way of knowing whether your terminal has an audible alarm.

INPUT specifies that the audible alarm is to sound when a line of information enters the input stream for the specified function.

OUTPUT specifies that the audible alarm is to sound when the a line of information enters the output stream for the specified function.

NO specifies that the audible alarm is not to sound when information is added to any of the function streams.

CHANGE.FUNCTION Command Return Codes

Figure 2-3. CHANGE.FUNCTION Command Return Codes

0	Processing successful.
4	Syntax error in command.
8	Stream not found.

CHANGE.FUNCTION Command Examples

Example 1

Define the MSG function so that all messages are highlighted in the TSOOUT stream and the terminal's audible alarm sounds when you receive a message.

```
change.function msg output(tsoout 2) alarm(output)
```

Example 2

Set the Session Manager function to get commands from the SMIN stream and place the output from these commands in the SMOUT stream highlighted. The information in the SMIN stream is not to be copied to the SMOUT stream.

```
change.function sm input(smin) output(smout 2) nocopy
```

Example 3

Set the SM function to copy the SMIN stream into the SMOUT stream.

```
change.function sm copy(smout)
```

Example 4

Set the TSO function to get its input from the TSOIN stream and highlight its output in the TSOOUT stream. The information in the TSOIN stream is to be copied into the TSOOUT stream.

```
change.function tso input(tsoin) output(tsoout 2)
  copy(tsoout)
```

CHANGE.MODE Command

Use the CHANGE.MODE command to indicate whether you want to run under VS/APL or the Session Manager.

CHANGE.MODE Command Syntax

```
►►──┬─CHANGE.MODE─┬──┬─APL─┬──────────────────────────────────────►◄
    ├─C.M─────────┤  └─SM──┘
    └─C M─────────┘
```

CHANGE.MODE Command Operands

APL

indicates that you are running VS/APL and you want the Session Manager to provide any additional functions that were designed specifically to enhance the interface between the Session Manager and VS/APL.

Note: To use a VS/APL program function (PF) key definition, first make the corresponding Session Manager PF key definition null. To find out how to make a PF key null, refer to the CHANGE.PFK command.

SM

indicates that you are running under the Session Manager.

CHANGE.MODE Command Return Codes

Figure 2-4. CHANGE.MODE Command Return Codes

0	Processing successful.
4	Syntax error in command.

CHANGE.MODE Command Examples

Example 1

Change the mode to run under VS/APL.

```
change.mode apl
```

CHANGE.PFK Command

Use the CHANGE.PFK key to change the definition of a program function (PF) key. You can define a PF key to issue one or more Session Manager commands, TSO/E commands, input to an application program, or any other string of characters.

CHANGE.PFK Command Syntax

```
►►─┬─CHANGE.PFK─┬─pfk_number──definition_text_string──stream_name──────►
   ├─C.P────────┤
   └─C P────────┘

►──┬──────────────────────────────────────────────────────────────────►◄
   │                  ┌─&──────────┐   ┌─b──────────┐
   └─SUBSTITUTE(──┬───┴─identifier─┴───┴─────────────┴──)──┘
                  └─────────────────────┴─delimiter─┘
```

CHANGE.PFK Command Operands

pfk_number
The number of the PF key to be changed. If you specify a number that does not exist on your terminal, the Session Manager still accepts this operand. It has no way of knowing how many PF keys you have.

definition_text_string
The string of characters that are to be placed in the specified stream. If the text string contains lowercase letters, blanks, commas, or parentheses, enclose it in single quotes. A single quote mark in the text string must be represented as two adjacent quotes.

If there are no blanks, commas, or parentheses in the text string, you can omit the enclosing quotes. If you omit the quotes, however, the Session Manager translates the text string to uppercase letters. When using the CHANGE.PFK command in a CLIST, the Session Manager always stores the text string in uppercase letters, even if it is enclosed in quotes.

If you enter more than one command for the text string, separate them with a semicolon (;).

If you want to use a PF key defined under some other 3270 application (for example, VS/APL), first define the *definition_text_string* for the PF key as null to the Session Manager. The PF key can then be passed back to the application. To specify a null PF key, define the *definition_text_string* as two adjacent quotes (`''`).

stream_name
The name of the stream where the text string is to be placed.

SUBSTITUTE
specifies that the information read from the screen is to be substituted into the '*definition_text_string*', replacing the symbolic arguments.

identifier identifies the symbolic argument that is to be replaced. Any character (except a blank or comma) can be used as the identifier. If the identifier character appears elsewhere in the *definition_text_string*, it must be doubled.

delimiter separates the information on the screen that is to be substituted into the text string. One or more blanks are treated as a single delimiter. The *delimiter* can be any character except a comma.

CHANGE.PFK Command Return Codes

Figure 2-5. CHANGE.PFK Command Return Codes

0	Processing successful.
4	Syntax error in command.
8	Stream not found.

CHANGE.PFK Command Examples

Example 1

Change PF1 to place the TSO/E TIME command in the TSOIN stream where it will be executed.

```
change.pfk 1 'time' tsoin
```

Example 2

Change PF12 to issue the QUERY.TERMINAL command. Direct the output to the EXTRA1 stream and cause the default window to display that stream.

```
change.pfk 12 'query.terminal extra1;change.window
  view(extra1)' smin
```

Example 3

Change PF2 to issue the TSO/E LISTDS command. Each line typed just before the key is pressed is to be substituted as the data set name operand for the command.

```
change.pfk 2 'listds &1;.* members' tsoin substitute
```

If you type the following on the screen:

```
test
sample
```

and pressed PF2, the following TSO/E commands are executed:

```
listds test.* members
listds sample.* members
```

CHANGE.STREAM Command

Use the CHANGE.STREAM command to:

- Change whether the terminal's audible alarm is to sound when information enters a stream
- Erase all of the information in a stream

(Use the QUERY.STREAMS command to display the names and attributes of all of the streams.)

CHANGE.STREAM Command Syntax

```
►►──┬─CHANGE.STREAM─┬──stream_name──┬──────────────────────────┬──┬──────────┬──────────►◄
    ├─C.S───────────┤               └─ALARM(──┬─YES─┬──)──┘  └─CLEAR─┘
    └─C S───────────┘                         └─NO──┘
```

CHANGE.STREAM Command Operands

stream_name
The name of the stream to be changed.

ALARM(YES | NO)
specifies whether the terminal's audible alarm is to sound when information enters the stream. The stream does not have to be currently displayed for the alarm to sound. If your terminal does not have an audible alarm, the Session Manager still accepts this operand. It has no way of knowing whether your terminal has an alarm.

CLEAR
erases all of the information in the stream. The stream itself is not erased.

CHANGE.STREAM Command Return Codes

Figure 2-6. CHANGE.STREAM Command Return Codes

0	Processing successful.
4	Syntax error in command.
8	Stream not found.

CHANGE.STREAM Command Examples

Example 1

Set the display terminal's audible alarm to sound when information goes into the EXTRA1 stream.

```
change.stream extra1 alarm(yes)
```

Example 2

Erase all information in the TSOOUT stream.

```
change.stream tsoout clear
```

CHANGE.TERMINAL Command

Use the CHANGE.TERMINAL command to:

- Specify whether the audible alarm is to sound when the keyboard unlocks
- Indicate the maximum time the keyboard is to be locked while a command is executing
- Change the default window

CHANGE.TERMINAL Command Syntax

```
►►─┬─CHANGE.TERMINAL─┬─┬──────────────────────────────────────────►
   ├─C.T─────────────┤ └─ALARM(─┬─YES─┬─)─┘
   └─C T─────────────┘          └─NO──┘
►─┬─────────────────────────────────────────────────────────────►◄
  └─CONTROL(─┬─LAST────────┬─)─┘ └─DEFAULT(window_name)─┘
             └─seconds─────┘
```

CHANGE.TERMINAL Command Operands

ALARM(YES | NO)
specifies whether the terminal's alarm is to sound when the keyboard unlocks. When the keyboard is unlocked, you can enter input. If your terminal does not have an audible alarm, the Session Manager still accepts this operand. It has no way of knowing whether your terminal has an alarm.

CONTROL(LAST | *seconds***)**
specifies the maximum time, in seconds, that the keyboard is to remain locked. The Session Manager sets a timer to unlock the terminal keyboard when the time expires. Note, however, that when the keyboard is locked, you cannot enter commands, and attention interrupts will not be processed.

LAST specifies that the timer is to be set to the last non-zero value entered for the CONTROL keyword of this command.

seconds specifies that the keyboard is to be unlocked after the specified number of seconds has elapsed. *seconds* must be an integer from 0 to 999.

DEFAULT(*window_name***)**
The name of the window that you want to be the default window. This window serves as the default window for other Session Manager commands when a window name is entered with the command. The MAIN window is the IBM-supplied default window.

CHANGE.TERMINAL Command Return Codes

Figure 2-7. CHANGE.TERMINAL Command Return Codes

0	Processing successful.
4	Syntax error in command.
8	Window not found.

CHANGE.TERMINAL Command Examples

Example 1

Set the terminal so that the keyboard will be locked for no more than 10 seconds.

```
change.terminal control(10)
```

Example 2

Set the terminal so that each time the keyboard unlocks the audible alarm sounds.

```
change.terminal alarm(yes)
```

Example 3

Set the terminal so that the keyboard will be locked for no more than 15 seconds and set the MAIN window as the default window.

```
change.terminal control(15) default(main)
```

CHANGE.WINDOW Command

Use the CHANGE.WINDOW command to change the attributes of an existing window on the display screen. Use the QUERY.TERMINAL or QUERY.WINDOWS command to display the names and attributes of the currently defined windows.

CHANGE.WINDOW Command Syntax

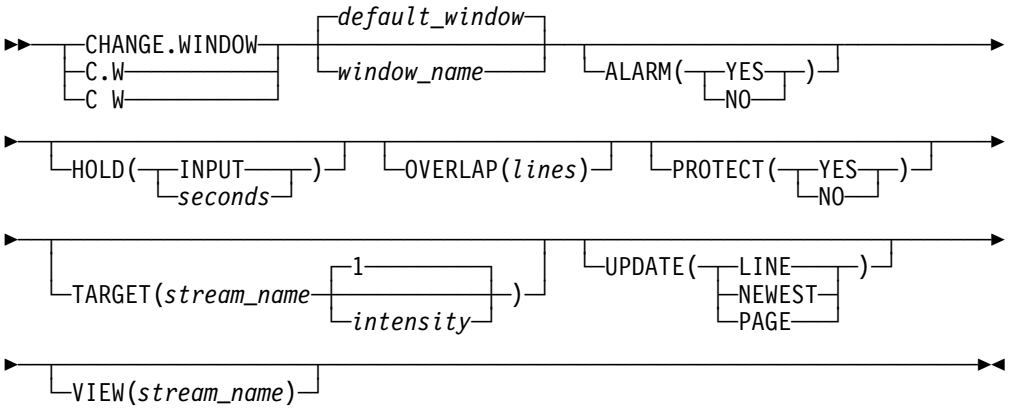

CHANGE.WINDOW Command Operands

window_name
The name of the window whose attributes are to be changed.

ALARM(YES | NO)
specifies whether the terminal's audible alarm is to sound when the Session Manager places new information in the stream. If your terminal does not have an audible alarm, the Session Manager still accepts this operand. It has no way of knowing whether your terminal has an alarm.

HOLD(INPUT | *seconds***)**
specifies how long the window (when unlocked) is to be held in place before it is scrolled towards the bottom of the stream.

INPUT specifies that the window (when unlocked) be held in place until you supply input by pressing the Enter key or any program function (PF) key.

seconds specifies that the window (when unlocked) be held in place the specified number of seconds before it is scrolled toward the bottom of the stream. *seconds* must be an integer from 0 to 999.

During the time the window is held in place, the keyboard remains locked. The keyboard unlocks when the time expires or when the window displays the bottom of the stream.

Note: The value specified on the CONTROL operand of the CHANGE.TERMINAL command overrides the value specified on this operand.

OVERLAP(*lines*)
specifies how many lines of the window's old position are to be repeated when the window scrolls to a new position.

lines must be an integer from 0 to 999. If you specify a value for *lines* that is greater than or equal to the number of lines in the window, the Session Manager adjusts *lines* to be the number of lines in the window minus one. Thus, at least the bottom line of the window's old position appears at the top of the window's new position.

PROTECT(YES | NO)
specifies whether you can enter data in the window. You can enter data in an unprotected window only. If you try to enter data in a protected window, the keyboard locks.

TARGET(*stream_name intensity*)

stream_name is the name of the stream that is to receive the information entered in the window.

intensity specifies the brightness at which the information in the stream is to be displayed. The valid values are:

0 The information in the stream is not to be displayed. You can see the line that the information occupies, but the information itself is invisible.

1 The information is to be displayed at normal intensity.

2 The information is to be highlighted.

UPDATE(LINE | NEWEST | PAGE)
specifies how much new information must enter the stream before the Session Manager updates the window. The window scrolls only when it is unlocked.

LINE specifies that the window scroll sequentially towards the bottom of the stream. Thus, all of the new information is displayed as the window scrolls over the stream. When the window is full, it scrolls forward (repeating the number of lines specified by the OVERLAP operand) and the new information again starts to fill up the window.

NEWEST specifies that the window always display the newest information in the stream. When new information enters the stream, the window scrolls directly to the bottom of the stream. Some information in the stream might be skipped over. Thus, if a large amount of information is sent to the stream in a short period of time, only the last few lines (the number of lines in the window) are displayed.

PAGE specifies that the window scroll sequentially over the stream when there are enough new lines of information (minus the number of overlap lines) to fill the window. The window does not scroll to display the new information

until enough additional information (a “page” of information) enters the stream.

VIEW(*stream_name***)**
The name of the stream the window is to display. Initially, the Session Manager places the window at the bottom of the stream and unlocks the window.

CHANGE.WINDOW Command Return Codes

Figure 2-8. CHANGE.WINDOW Command Return Codes

0	Processing successful.
4	Syntax error in command.
8	Window not found.

CHANGE.WINDOW Command Examples

Example 1
Change the TEST window to display the SMOUT stream.

```
change.window test view(smout)
```

Example 2
Change the PASSWD window so that TSO/E passwords can be entered in non-display mode.

```
change.window passwd target(tsoin 0)
```

Example 3
Change the default window so that input cannot be entered there.

```
change.window protect(yes)
```

DEFINE.WINDOW Command

Use the DEFINE.WINDOW command to define a new window on the display screen.

DEFINE.WINDOW Command Syntax

```
►►─┬─DEFINE.WINDOW─┬─window_name─row─column─┬─lines─┬─┬─width─┬──►
   ├─D.W───────────┤                        └─MAX───┘ ├─MAX───┤
   └─D W───────────┘                                  └─WRAP──┘

►─┬─ALARM(─┬─YES─┬─)─┬─┬─HOLD(─┬─0───────┬─)─┬──────────────────────►
      │    └─NO──┘   │ │       ├─INPUT───┤   │
      │              │ │       └─seconds─┘   │
      └──────────────┘ └─────────────────────┘

►─┬─OVERLAP(─┬─1─────┬─)─┬─┬─PROTECT(─┬─YES─┬─)─┬──────────────────►
      │      └─lines─┘   │ │          └─NO──┘   │
      └──────────────────┘ └────────────────────┘

►─┬─TARGET(─┬─TSOIN───────┬─┬─1─────────┬─)─┬──────────────────────►
      │     └─stream_name─┘ │           │   │
      │                     └─intensity─┘   │
      └─────────────────────────────────────┘

►─┬─UPDATE(─┬─LINE────┬─)─┬─┬─VIEW(─┬─TSOOUT──────┬─)─┬──►◄
      │       ├─NEWEST──┤   │ │       └─stream_name─┘   │
      │       └─PAGE────┘   │ └─────────────────────────┘
      └─────────────────────┘
```

DEFINE.WINDOW Command Operands

window_name
The name of the window being defined. The name must be 1 to 8 alphanumeric characters, with the first character alphabetic.

row
specifies which row of the display screen the top line of the window is to occupy. *row* must be an integer n or -n, where n can be any number from 1 to the number of rows on the display screen. An integer of -n is relative to the bottom of the screen. For example, a row value of -4 on a 24 line screen means that the top line of the window is to be row 21.

column
specifies which column of the display screen the left side of the window is to occupy. *column* must be an integer n or -n, where n can be any number from 1 to the number of columns on the screen. An integer of -n is relative to the right side of the display screen. For example, a column value of -4 on an 80 column screen means that the left side of the window is to be in column 77.

lines **| MAX**
specifies the number of lines in the window. *lines* must be an integer *n* or the character string `MAX`. The value *n* can be any number from 1 to the number of lines on the display screen. MAX indicates that the window is to consist of the remaining lines on the display screen or until a line is encountered that has already been defined as part of another window.

width **| MAX | WRAP**
specifies the number of character positions in each line of the window. *width* can be an integer n or the character string MAX or WRAP.

width can be any number from 1 (or the number defined as the starting column) to the physical width of the display screen.

MAX indicates that the width of the window should be determined by the number of character positions available in the first line of the window (those not used by another window).

WRAP indicates that the width of the window is to start from the column value specified with this command and continue to either the beginning of the next window or to the last row and column of the screen. WRAP can only be used when *lines* is defined as 1.

Note: The first character position in a window is used as a terminal attribute byte and is protected. Therefore, a window defined with a width of 1 is useless.

ALARM(YES | NO)
specifies whether the terminal's audible alarm is to sound when the Session Manager scrolls the window to display new information in the stream. If your terminal does not have an audible alarm, the Session Manager still accepts this operand. It has no way of knowing whether your terminal has an alarm.

HOLD(INPUT | *seconds***)**
specifies how long the window (when unlocked) is to be held in place before it is scrolled towards the bottom of the stream.

INPUT specifies that the window (when unlocked) be held in place until you supply input by pressing the Enter key or any program function (PF) key.

seconds specifies that the window (when unlocked) be held in place the specified number of seconds before it is scrolled toward the bottom of the stream. *seconds* must be an integer from 0 to 999.

During the time the window is held in place, the keyboard remains locked. The keyboard unlocks when the time expires or when the window displays the bottom of the stream.

Note: The value specified on the CONTROL operand of the CHANGE.TERMINAL command overrides the value specified on this operand.

OVERLAP(*lines***)**
specifies how many lines of the window's old position are to be repeated when the window scrolls to the new position.

lines must be an integer from 0 to 999. If you specify a value for *lines* that is greater than or equal to the number of lines in the window, the Session Manager adjusts the value to be the number of lines in the window minus one. Thus, at least the bottom line of the window's old position always appears at the top of the window's new position.

PROTECT(YES | NO)
specifies whether you can enter data in the window. You can enter data in an unprotected window only. If you try to enter data in a protected window, the keyboard locks.

TARGET(*stream_name intensity***)**

stream_name The name of the stream that is to receive the information entered in the window.

intensity specifies the brightness at which the information in the stream is to be displayed. The valid values are:

0 The information in the stream is not to be displayed. You can see the line that the information occupies, but the information itself is invisible.

1 The information is to be displayed at normal intensity.

2 The information is to be highlighted.

UPDATE(LINE | NEWEST | PAGE)
specifies how much new information must enter the stream before the Session Manager updates the window. The window scrolls only when it is unlocked.

LINE specifies that the window scroll sequentially towards the bottom of the stream. Thus, all of the new information is displayed as the window scrolls over the stream. When the window is full, it scrolls forward (repeating the number of lines specified by the OVERLAP operand) and the new information again starts to fill up the window.

NEWEST specifies that the window always display the newest information in the stream. When new information enters the stream, the window scrolls directly to the bottom of the stream. Some information in the stream might be skipped over. Thus, if a large amount of information is sent to the stream in a short period of time, only the last few lines (the number of lines in the window) are displayed.

PAGE specifies that the window scroll sequentially over the stream when there are enough new lines of information (minus the number of overlap lines) to fill the window. The window does not scroll to display the new information until enough additional information (a “page” of information) enters the stream.

VIEW(*stream_name* **| TSOOUT)**
The name of the stream that the window is to display. Initially, the Session Manager places the window at the bottom of the stream and unlocks the window.

DEFINE.WINDOW Command Return Codes

Figure 2-9. DEFINE.WINDOW Command Return Codes

0	Processing successful.
4	Syntax error in command.
8	Window not found.

DEFINE.WINDOW Command Examples

Example 1

Note: The display screen for this example contains 24 lines and is 80 columns wide.

Create a screen layout having an output window occupying the top 22 lines of the screen with a character width of the entire screen and an input window that occupies the bottom two lines of the screen but is logically a single line. The output window is to display the TSOOUT stream and input window is to display the HEADER stream. All other attributes of the windows are to assume the default values.

```
define.window output 1 1 22 max
define.window input -2 1 1 wrap view(header)
```

DELETE.WINDOW Command

Use the DELETE.WINDOW command to delete a window from the display screen.

DELETE.WINDOW Command Syntax

```
►►──┬─DELETE.WINDOW─┬──┬─window_name─┬──────────────────────────────►◄
    ├─D.W───────────┤  └─*────────────┘
    └─D W───────────┘
```

DELETE.WINDOW Command Operands

window_name
The name of the window to be deleted.

***** specifies that all of the windows on the display screen are to be deleted. When all windows are deleted, press the CLEAR key before entering commands from the keyboard.

DELETE.WINDOW Command Return Codes

Figure 2-10. DELETE.WINDOW Command Return Codes

0	Processing successful.
4	Syntax error in command.
8	Window not found.

DELETE.WINDOW Command Examples

Example 1

Delete the TEST window.

```
delete.window test
```

Example 2

Delete all of the windows on the display screen.

```
delete.window *
```

END Command

Use the END command to end Session Manager display support of your TSO/E session. The information in your streams is erased when you issue the END command. If, after issuing this command, you want to have Session Manager support again, you must reissue the TSO/E LOGON command.

END Command Syntax

```
►►──END──────────────────────────────────────────────────────────►◄
```

FIND Command

Use the FIND command to search for a specific text string in the stream that a window is displaying or to determine the number of the top line displayed in a window.

If the Session Manager finds the text string, it scrolls the window so that the line containing the text string is displayed on the top line of the window and the window is locked. If the text string is not found, the Session Manager places a message in the Session Manager output stream. If you issue the FIND command with a null text string (adjacent quote marks `''`), the Session Manager searches for the previous text string.

For the FIND.LINE command, the Session Manager writes the following message in the specified window:

```
ADF031I  window_name VIEWING LINE nnnnn
```

‘nnnnn’ is the top line number in the window.

The FIND.LINE command is useful for finding a line number for the SCROLL.ABSOLUTE command, for copying a range of lines using the SMCOPY command, or for locating a text string within a range of lines using the SMFIND command. The Session Manager does not lock the window when you use the FIND.LINE command.

FIND Command Syntax

```
►►──┬─FIND.─┬──┬──┬─BACKWARD─┬──'text_string'──────────────────────►
    └─F─────┘  │  │ └─B──────┘                                       │
               │  └─FORWARD──┬──┘                                    │
               │             └─F──┘                                   │
               └─LINE──┬──────────────────────────────────────────────┘
                       └─L─────┘  │                                  │
                                  └─TARGET(──┬─SMOUT──────────┬──)──┘
                                             └─stream_name────┘

►──┬─default_window─┬──────────────────────────────────────────────►◄
   └─window_name────┘
```

FIND Command Operands

BACKWARD

causes the Session Manager to search for the specified *text_string* from the top line in the window on the display screen backward toward the top of the stream. The stream searched is the one displayed in either the default window or the window specified on the command.

FORWARD
causes the Session Manager to search for the specified *text_string* from the current line on the display screen forward toward the bottom of the stream. The stream searched is the one displayed in either the default window or the window specified on the command.

LINE
causes the Session Manager to find the number of the top line in the default window or the specified window and writes a message identifying the line number in the specified stream.

text_string
The string of characters for which Session Manager is to search. If the *text_string* contains lowercase letters, blanks, commas, or parentheses, enclose it in single quotes. A single quote mark in the *text_string* must be represented as two adjacent quotes.

If there are no blanks, commas, or parentheses in the *text_string*, you can omit the enclosing quotes. If you omit the enclosing quotes, however, the Session Manager translates the *text_string* to uppercase letters before beginning the search. When the FIND command is used in a CLIST, the Session Manager always stores the *text_string* in uppercase letters, even if it is enclosed in quotes.

If you specify a null *text_string*, the Session Manager uses the last *text_string* you entered as the string of characters to search for. A null *text_string* is defined as two adjacent quotes (`''`).

TARGET(*stream_name* **| SMOUT)**
The name of the stream that is to contain the message produced by the FIND.LINE command.

window_name
For FIND.BACKWARD and FIND.FORWARD, *window_name* is the name of the window whose stream is to be searched.

For FIND.LINE, *window_name* is the name of the window whose top line number is to be found.

FIND Command Return Codes

Figure 2-11. FIND Command Return Codes

0	Processing successful.
4	Syntax error in command.
8	Text not found.

FIND Command Examples

Example 1

Assume that the default window is displaying the bottom of the TSOOUT stream. Find the last time the character string ‘link’ was issued.

```
find.backward 'link'
```

Example 2

Assume that the TEST window is displaying the top of the TSOOUT stream. Find the first time you edited a data set named ‘abc.asm’.

```
find.forward 'edit abc.asm' test
```

Now find the next occurrence of this same text string.

```
find.forward '' test
```

PUT Command

Use the PUT command to place a text string in a Session Manager stream. If you place the text string in the TSOIN stream, it is sent to TSO/E to be executed as a TSO/E command. If you place the text string in the SMIN stream, it is interpreted as a Session Manager command. The length of the entire PUT command cannot exceed 512 characters.

PUT Command Syntax

```
►►──┬PUT┬──'text_string'──stream_name──┬──────────────────────────────┬──►◄
    └P──┘                             │                 ┌─1─────────┐  │
                                      └─INTENSITY(──┬──────┴─intensity──┴─)─┘
```

PUT Command Operands

text_string

The string of characters to be placed in the stream. If the *text_string* contains lowercase letters, blanks, commas, parentheses, it must be enclosed in single quote marks. A single quote mark in the *text_string* must be represented as two adjacent quotes.

If there are no blanks, commas, or parentheses in the *text_string*, you can omit the enclosing quotes. If you omit the enclosing the enclosing quotes, however, the Session Manager translates the *text_string* to uppercase letters before beginning the search. When the PUT command is used in a CLIST, the Session Manager always stores the *text_string* in uppercase letters, even if it is enclosed in quotes.

stream_name

The name of the stream where the *text_string* is to be placed. The Session Manager places the *text_string* at the bottom of this stream.

INTENSITY(*intensity***)**

specifies the brightness at which the *text_string* is to be displayed in the stream. The valid values are:

0 The *text_string* is not to be displayed. You can see the line that the *text_string* occupies, but the information itself is invisible.

1 The *text_string* is to be displayed at normal intensity.

2 The *text_string* is to be highlighted.

PUT Command Return Codes

Figure 2-12. PUT Command Return Codes	
0	Processing successful.
4	Syntax error in command.
8	Stream not found.

PUT Command Examples

Example 1

Place a comment in the TSOOUT stream and highlight it.

```
put 'this is a comment' tsoout intensity(2)
```

Example 2

Use the PUT command in the *definition_text_string* of the CHANGE.PFK command. When pressed, PF3 is to issue the TSO/E TIME command and the Session Manager UNLOCK.NEWEST command. The commands are to be placed in the SMIN stream.

```
change.pfk 3 'put time tsoin;put 'unlock newest'
smin' smin
```

QUERY Command

Use the QUERY command to display information about the Session Manager functions, program function (PF) keys, streams, terminal, and windows.

QUERY Command Syntax

```
►►──┬─QUERY.─┬──┬─FUNCTION─┬──┬─TSOOUT──────────┬──────────────────────►◄
    └─Q──────┘  │ └─F──────┘  │ └─stream_name───┘
                ├─PFKS─────── │
                │ └─P────────┘│
                ├─STREAMS──── │
                │ └─S────────┘│
                ├─TERMINAL─── │
                │ └─T────────┘│
                └─WINDOWS──── │
                  └─W────────┘
```

QUERY Command Operands

FUNCTION

displays the following information for each currently defined session function:

- The name of the function
- The input, output, and copy streams for the function
- Whether the audible alarm is to sound when information enters the input and output streams
- The intensity at which the information in the output and copy streams is displayed.

PFKS
displays the following information for each currently defined program function (PF) key:

- The number of the PF key
- The name of the stream where the text_string is to be placed
- The identifier and delimiter characters for the PF keys
- The text_string used to define the key.

STREAMS
displays the following information for each currently defined stream:

- The name of the stream
- The numbers of the top and bottom lines in the stream
- The maximum size of the stream (in lines and bytes)
- The number of lines and bytes currently used by the stream
- The type of stream (input, output, or extra)
- Whether the audible alarm is to sound when information enters the stream.

TERMINAL
displays the following information about the terminal environment:

- The control setting for the keyboard indicating the maximum time the keyboard is to remain locked
- Whether the audible alarm is to sound when the keyboard unlocks
- The current number of windows defined on the display screen
- The maximum number of windows that can be defined
- The name of the default window
- The permanent location of the cursor
- The following information for each currently defined window:
  - The name of the window
  - The name of the stream that the window displays
  - Whether the window is locked
  - Whether you can enter data in the window
  - The name of the stream that is to receive the information entered in the window
  - The intensity at which the information in the stream is to be displayed
  - Whether the terminal's audible alarm is to sound when the Session Manager scrolls the window to display new information in the stream
  - How long the window (when unlocked) is to be held in place before it is scrolled towards the bottom of the stream
  - How many lines of the window's old position are to be repeated when the window scrolls to the new position
  - How much new information must enter the stream before the Session Manager updates the window.

WINDOWS
displays the following information for each currently defined window:

- The name of the window
- The starting location of the window on the display screen (in rows and columns)
- The size of the window (in lines and width)
- The name of the stream that the window displays
- The numbers of the top and bottom lines of the stream that the window is currently displaying
- The numbers of the top and bottom lines of the stream that the window was displaying when it was last unlocked. (These numbers are used when the UNLOCK.RESUME command is issued.)
- The numbers of the top and bottom lines of the newest information in the stream that the window is currently displaying.

stream_name
The name of the stream where the output from the command is to be placed. The output is in table format.

QUERY Command Return Codes

Figure 2-13. QUERY Command Return Codes

0	Processing successful.
4	Syntax error in command.
8	Stream not found.

QUERY Command Examples

Example 1

Display the information for all session functions.

```
query.function
```

The output from the command is as follows:

```
FUNCTION     INPUT            OUTPUT           COPY
  NAME    STREAM  ALARM  STREAM  INT ALARM  STREAM  INT
TSO      TSOIN      N   TSOOUT    1    N   TSOOUT     2
SM       SMIN       N   SMOUT     2    Y    SMOUT     0
MSG       *NONE*        TSOOUT    2    Y     *NONE*
```

Example 2

Display the information for all streams defined.

```
query.streams
```

The output from the command is as follows:

```
 STREAM    LINE  RANGE   MAXIMUM  SIZE       USED
  NAME     LOW    HIGH  LINES     BYTES  LINES  BYTES  TYPE  ALARM
TSOIN        1       4    305      8192      4     82  INPUT   N
TSOOUT       1      47   4005    147456     47   4678  OUTPUT  N
EXTRA1       1       1    405     32768      1     38  OUTPUT  N
SMOUT        1      61    155      4096     61    424  OUTPUT  N
HEADER       1       9     55      1024      9    349  EXTRA   N
EXTRA3       1       2    105      1024      2     47  EXTRA   N
EXTRA2       1       1    105      1024      1     38  EXTRA   N
MESSAGE      1       1     55      1024      1     39  OUTPUT  Y
SMIN         1      59    305      8192     59   6192  INPUT   N
QUERY COMPLETE
```

Example 3

Display all information related to the terminal.

```
query.terminal
```

The output from the command is as follows:

```
KEYBOARD   CNTL    ALARM
             15      N
WINDOWS    CURRENT # MAXIMUM #       DEFAULT WINDOW    CURSOR POSITION
            11         25             MAIN           ENTRY      1    1
  NAME    VIEW  LOCKED  PROT  TARGET  INTENSITY  ALARM  HOLD  OVERLAP  UPDATE
LINE    HEADER    Y       Y   TSOIN       1         N      0        0    N
STITLE  HEADER    Y       Y   TSOIN       1         N      0        0    N
SVALUE  EXTRA3    N       Y   EXTRA3      1         N      0        0    N
LTITLE  HEADER    Y       Y   TSOIN       1         N      0        0    N
LVALUE  HEADER    Y       Y   TSOIN       1         N      0        0    N
VLINE   HEADER    Y       Y   TSOIN       1         N      0        0    N
PASSWD  SMOUT     N       N   TSOIN       0         N      0        0    N
CURRENT TSOOUT    N       N   TSOIN       1         N      0        0    N
TENTRY  HEADER    Y       Y   TSOIN       1         N      0        0    N
ENTRY   HEADER    Y       N   TSOIN       1         N      0        0    N
MAIN    TSOOUT    N       N   TSOIN       1         N      I        9    L
QUERY COMPLETE
```

Example 4

Display the information for all windows defined:

```
query.windows
```

The output from the command is as follows:

```
                                          PRESENT       RESUME       NEWEST
                                VIEWING   TOP  BOTTOM  TOP  BOTTOM TOP  BOTTOM
 WINDOW  ROW COL LINES WIDTH  STREAM   LINE  LINE   LINE  LINE   LINE  LINE
LINE      20   1     1    80  HEADER      2     2      1     1     10    10
STITLE    21  63     1    12  HEADER      6     6      1     1     10    10
SVALUE    21  75     1     6  EXTRA3      2     2      1     1      2     2
LTITLE    22  63     1     9  HEADER      9     9      1     1     10    10
LVALUE    22  72     1     9  HEADER      7     7      1     1     10    10
VLINE     24  41     1     2  HEADER      4     4      1     1     10    10
PASSWD    24  43     1    38  SMOUT      57    57      1     1     10    10
CURRENT   21   1     2    62  TSOOUT     36    37     36    37     46    47
TENTRY    23   1     1     5  HEADER      3     3      1     1     10    10
ENTRY     23   6     1   114  HEADER     10    10      1     1     10    10
MAIN       1   1    19    80  TSOOUT      1    19      1    19     32    50
QUERY COMPLETE
```

RESET Command

Use the RESET command to restart your Session Manager display environment. For example, if you accidentally deleted any of the windows on your display screen, use RESET to get the default display screen back. This command removes the entries from all of the stacks and re-executes the commands that created the default environment. The RESET command causes the HEADER stream to be cleared and then redefined containing only those lines needed in the default environment. In addition, the default scroll amount is placed in the EXTRA3 stream, thereby resetting the default scroll amount on your display screen. None of the other streams are altered.

The RESET command should not be followed by any other Session Manager command on the same line. A command entered on the same line executes before the RESET command can reestablish the default screen layout.

RESET Command Syntax

```
►►──RESET──────────────────────────────────────────────────────────────────►◄
```

RESET Command Return Codes

Figure 2-14. RESET Command Return Codes

0	Processing successful.
4	Syntax error in command.
8	Window not found.

RESTORE Command

Use the RESTORE command to restore the definitions of the program function (PF) keys, screen layout, or windows previously saved via the SAVE command. If only one set of definitions exists on the stack, it is not removed. If more than one set of definitions has been saved, you must issue the RESTORE command as many times as you issued the SAVE command to get to the definitions you want.

RESTORE Command Syntax

```
►►─┬─RESTORE.─┬─┬─PFKS─┬──────────────────────────────────────────►◄
   └─R────────┘ │ └─P──┘                                          │
                ├─SCREEN─┬──────────────────────────────────────────┤
                │ └─S────┘                                          │
                │                   ┌─default_window─┐              │
                └─WINDOW─┬─────────┬─┤                ├──────────────┘
                  └─W────┘         └─window_name────┘
```

RESTORE Command Operands

PFKS

specifies that the Session Manager is to restore the program function (PF) key definitions.

SCREEN

specifies that the Session Manager is to restore the screen layout. The following items are included in each screen stack element:

- A description of the screen layout
- The location of the cursor
- The value indicating how long the keyboard is to remain locked while a command is executing (as set using the CHANGE.TERMINAL command)
- The name of the default window
- The name and attributes of each window.

WINDOW

specifies that the Session Manager is to restore the window definitions. Each window description element contains the following information:

- The audible alarm setting for the window (ALARM)
- The amount of time the window (when unlocked) is held in place before it is scrolled toward the bottom of the stream (HOLD)
- The number of lines from the window's old position that are to be repeated when the window scrolls (OVERLAP)
- Whether you can enter data in the window (PROTECT)
- The name of the stream that is to receive the information typed in the window and the intensity at which the information is to be displayed (TARGET)
- How often the window is to scroll over the new information in the stream (UPDATE)
- The name of the stream the window is displaying (VIEW)
- The numbers of the top and bottom lines in the stream that the window is currently displaying
- Whether the window is locked or unlocked

The location and size of the window are not restored.

window_name
The name of the window whose description is to be restored.

RESTORE Command Return Codes

Figure 2-15. RESTORE Command Return Codes	
0	Processing successful.
4	Syntax error in command.
8	Stream or window not found.

RESTORE Command Examples

Example 1

Restore the definition of the TEST window that was previously saved via the SAVE command.

```
restore.window test
```

SAVE Command

Use the SAVE command to save the current definitions of program function (PF) keys, windows, and the screen layout. Later, you can restore these same definitions by using the RESTORE command.

SAVE Command Syntax

```
►►──┬─SAVE.─┬──┬─┬─PFKS──┬──────────────────────────────────────────►◄
    └─S─────┘  │ └─P─────┘                                          │
               ├─┬─SCREEN─┬──────────────────────────────────────────┤
               │ └─S──────┘                                          │
               │                      ┌─default_window─┐             │
               └─┬─WINDOW─┬──────────┤                ├─────────────┘
                 └─W──────┘          └─window_name────┘
```

SAVE Command Operands

PFKS
specifies that all current PF key definitions are to be saved as the top element of the PF key stack.

SCREEN
specifies that the current screen layout is to be saved as the top element on the screen stack. The following items are saved for each screen stack element:

- A description of the screen layout
- The location of the cursor
- The value indicating how long the keyboard is to remain locked while a command is executing (as set using the CHANGE.TERMINAL command)
- The name of the default window
- The name and attributes of each window.

WINDOW
requests that the definitions for the default window or the window specified on the command be saved as the top element of the window stack. Each window description element contains the following information:

- The audible alarm setting for the window (ALARM)
- The amount of time the window (when unlocked) is held in place before it is scrolled toward the bottom of the stream (HOLD)
- The number of lines from the window's old position that are to be repeated when the window scrolls (OVERLAP)
- Whether you can enter data in the window (PROTECT)
- The name of the stream that is to receive the information typed in the window and the intensity at which the information is to be displayed (TARGET)
- How often the window is to scroll over the new information in the stream (UPDATE)
- The name of the stream the window is displaying (VIEW)
- The numbers of the top and bottom lines in the stream that the window is currently displaying
- Whether the window is locked or unlocked

The location and size of the window are not saved.

window_name
The name of the window whose description is to be saved.

SAVE Command Return Codes

Figure 2-16. SAVE Command Return Codes

0	Processing successful.
4	Syntax error in command.
8	Window not found.

SAVE Command Examples

Example 1

Save the definition of the TEST window on the window stack.

```
save.window test
```

SCROLL Command

Use the SCROLL command to move a window over a stream. After the Session Manager moves the window, the window is locked in position. You can then move the window by using another scroll command or you can unlock the window by using the UNLOCK command.

SCROLL Command Syntax

```
►►─┬─SCROLL.─┬─┬─┬─ABSOLUTE─┬─┬─────────────┬─┬──────────────────────────────────►
   └─S───────┘ │ └─A────────┘ └─line_number──┘ │
               │ ┌─BACKWARD─┬─┬─────────────┬─┬─┬─────────────┬─┬─┬─0─────┬─┬─┬─┬─
               │ │ └─B──────┘ │             │ │ │             │ │ │       │ │ │ │
               │ │ ┌─FORWARD──┘ └─pages──────┘ └─pages──────┘ └─┴─lines──┘ └─┴─┴─
               │ │ └─F──────┘                                                 │
               │ │ ┌─LEFT─────┬─┬─────────────┬─┬─┬─────────────┬─┬─┬─┬─
               │ │ │ └─L──────┘ │             │ │ │             │ │ │ │
               │ │ └─RIGHT────┘ └─columns────┘ └─┴─columns────┘ └─┴─┴─
               │ │ └─R──────┘                                                 │
               │ │ ┌─NEWEST───┬─┬─┬─┬─
               │ │ │ └─N──────┘ │ │ │
               │ │ └─OLDEST───┘ └─┴─┴─
               │ │ └─O──────┘
               │ │
               │ │
               │ │
```

FORWARD
specifies that the Session Manager is to scroll the window forward toward the bottom of the stream.

LEFT
specifies that the Session Manager is to scroll the window toward the left side of the stream. The limit for scrolling left is column 1 of the stream.

columns specifies the number of columns to scroll the window.

If the AMOUNT keyword is entered, the default is 0. If the AMOUNT keyword is not entered, the default is 40.

If you specify a value that would cause the window to scroll beyond the left side of the stream, the Session Manager adjusts the value to place the window at column 1 of the stream. Values that would cause the window to scroll beyond column 32768 are adjusted to place the window at column 32,768.

RIGHT
specifies that the Session Manager is to scroll the window toward the right side of the stream. The limit for scrolling right is 32,768 column positions.

NEWEST
specifies that the Session Manager is to scroll the window forward to the bottom of the stream.

OLDEST
specifies that the Session Manager is to scroll the window backward to the top of the stream.

window_name
The name of the window to be scrolled.

AMOUNT
The amount the window is to be scrolled. AMOUNT can be specified instead of or in addition to, the operands *columns*, *lines*, or *pages*. If you enter a value for one of the preceding operands and a value for AMOUNT, the Session Manager sums the two values and scrolls the window the resulting amount. The valid AMOUNT values are:

HALF specifies that the window is to be scrolled half a page. (For forward or backward scrolling, a page is defined as the number of lines in the window. For right or left scrolling, a page is defined as the number of columns in the window.)

MAX specifies that the window is to be scrolled the maximum amount. For forward scrolling, MAX indicates to scroll to the bottom of the stream (equivalent to the SCROLL.NEWEST command). For backward scrolling, MAX indicates to scroll to the top of the stream (equivalent to the SCROLL.OLDEST command).

PAGE specifies that the window is to be scrolled a full page.

amount specifies the number of lines or columns to scroll the window.

SCROLL Command Return Codes

Figure 2-17. SCROLL Command Return Codes	
0	Processing successful.
4	Syntax error in command.
8	Window not found.

SCROLL Command Examples

Example 1

Scroll the default window to the oldest information.

```
scroll.oldest
```

or

```
scroll.backward amount(max)
```

Example 2

Scroll the TEST window forward one page.

```
scroll.forward test
```

or

```
scroll.forward test amount(page)
```

Example 3

Scroll the SAMPLE window backward 20 lines.

```
scroll.backward 0 20 sample
```

or

```
scroll.backward sample amount(20)
```

SNAPSHOT Command

Use the SNAPSHOT command to copy a display screen of information into a stream. You can then use the SMCOPY command to print the stream or copy it into a data set.

SNAPSHOT Command Syntax

```
►►──┬─SNAPSHOT─┬──stream_name──┬──────────┬──────────────────────────────►◄
    └─S────────┘               └─FORMAT───┘
```

SNAPSHOT Command Operands

stream_name
The name of the stream where the information is to go.

FORMAT
specifies that carriage control information is to be included in the copy of the information for printing on a system printer. Highlighted lines on the screen appear darker in the printed copy.

Note: If the copied information contains the carriage control characters, you must use the PREFORMAT operand of the SMCOPY command when printing it.

SHAPSHOT Command Return Codes

Figure 2-18. SHAPSHOT Command Return Codes

0	Processing successful.
4	Syntax error in command.
8	Stream not found.

SHAPSHOT Command Examples

Example 1

Place a copy of the display screen in the EXTRA1 stream.

```
snapshot extra1 format
```

Print the stream, using the SMCOPY command.

```
smcopy fromstream(extra1) preformat
```

UNLOCK Command

Use the UNLOCK command to unlock a window.

UNLOCK Command Syntax

```
►►──┬─UNLOCK.─┬──┬─┬─HERE───┬─┬─┬─default_window─┬──────────────────►◄
    └─U───────┘  │ └─H──────┘ │ │ └─window_name───┘
                 │ ┌─NEWEST───┐ │
                 │ └─N──────┘ │
                 └─RESUME─────┘
                   └─R────────┘
```

UNLOCK Command Operands

HERE
causes the Session Manager to unlock the specified window at its current position.

NEWEST
causes the Session Manager to display the newest information in the stream, then unlocks it.

RESUME
causes the Session Manager to display the information the window was viewing before being locked, then unlocks the window.

window_name
The name of the window to be unlocked.

UNLOCK Command Return Codes

Figure 2-19. UNLOCK Command Return Codes

0	Processing successful.
4	Syntax error in command.
8	Window not found.

UNLOCK Command Examples

Example 1

Move the default window to the bottom of the stream it is displaying and unlock it there.

```
unlock.newest
```

Example 2

Unlock the SAMPLE window at its current position.

```
unlock.here sample
```

Appendix A. Notices

This information was developed for products and services offered in the U.S.A.

IBM may not offer the products, services, or features discussed in this document in other countries. Consult your local IBM representative for information on the products and services currently available in your area. Any reference to an IBM product, program, or service is not intended to state or imply that only that IBM product, program, or service may be used. Any functionally equivalent product, program, or service that does not infringe any IBM intellectual property right may be used instead. However, it is the user's responsibility to evaluate and verify the operation of any non-IBM product, program, or service.

IBM may have patents or pending patent applications covering subject matter described in this document. The furnishing of this document does not give you any license to these patents. You can send license inquiries, in writing, to:

IBM Director of Licensing
IBM Corporation
North Castle Drive
Armonk, NY 10504-1785
USA

For license inquiries regarding double-byte (DBCS) information, contact the IBM Intellectual Property Department in your country or send inquiries, in writing, to:

IBM World Trade Asia Corporation
Licensing
2-31 Roppongi 3-chome, Minato-ku
Tokyo 106, Japan

The following paragraph does not apply to the United Kingdom or any other country where such provisions are inconsistent with local law:
INTERNATIONAL BUSINESS MACHINES CORPORATION PROVIDES THIS PUBLICATION “AS IS” WITHOUT WARRANTY OF ANY KIND, EITHER EXPRESS OR IMPLIED, INCLUDING, BUT NOT LIMITED TO, THE IMPLIED WARRANTIES OF NON-INFRINGEMENT, MERCHANTABILITY OR FITNESS FOR A PARTICULAR PURPOSE. Some states do not allow disclaimer of express or implied warranties in certain transactions, therefore, this statement may not apply to you.

This information could include technical inaccuracies or typographical errors. Changes are periodically made to the information herein; these changes will be incorporated in new editions of the publication. IBM may make improvements and/or changes in the product(s) and/or the program(s) described in this publication at any time without notice.

Any references in this information to non-IBM Web sites are provided for convenience only and do not in any manner serve as an endorsement of those Web sites. The materials at those Web sites are not part of the materials for this IBM product and use of those Web sites is at your own risk.

© Copyright IBM Corp. 1988, 1999

IBM may use or distribute any of the information you supply in any way it believes appropriate without incurring any obligation to you.

Licensees of this program who wish to have information about it for the purpose of enabling: (i) the exchange of information between independently created programs and other programs (including this one) and (ii) the mutual use of the information which has been exchanged, should contact:

IBM Corporation
Mail Station P300
522 South Road
Poughkeepsie, NY 12601-5400
USA

Such information may be available, subject to appropriate terms and conditions, including in some cases, payment of a fee.

The licensed program described in this information and all licensed material available for it are provided by IBM under terms of the IBM Customer Agreement, IBM International Program License Agreement, or any equivalent agreement between us.

Any performance data contained herein was determined in a controlled environment. Therefore, the results obtained in other operating environments may vary significantly. Some measurements may have been made on development-level systems and there is no guarantee that these measurements will be the same on generally available systems. Furthermore, some measurement may have been estimated through extrapolation. Actual results may vary. Users of this document should verify the applicable data for their specific environment.

Information concerning non-IBM products was obtained from the suppliers of those products, their published announcements or other publicly available sources. IBM has not tested those products and cannot confirm the accuracy of performance compatibility or any other claims related to non-IBM products. Questions on the capabilities of non-IBM products should be addressed to the suppliers of those products.

All statements regarding IBM's future direction or intent are subject to change without notice, and represent goals and objectives only.

This information contains examples of data and reports used in daily business operations. To illustrate them as completely as possible, the examples include the names of individuals, companies, brands, and products. All of these names are fictitious and any similarity to the names and addresses used by an actual business enterprise is entirely coincidental.

COPYRIGHT LICENSE:

This information contains sample application programs in source language, which illustrates programming techniques on various operating platforms. You may copy, modify, and distribute these sample programs in any form without payment to IBM, for the purposes of developing, using, marketing or distributing application programs conforming to the application programming interface for the operating platform for which the sample programs are written. These examples have not been thoroughly tested under all conditions. IBM, therefore, cannot guarantee or imply

reliability, serviceability, or function of these programs. You may copy, modify, and distribute these sample programs in any form without payment to IBM for the purposes of developing, using, marketing, or distributing application programs conforming to IBM's application programming interfaces.

If you are viewing this information softcopy, the photographs and color illustrations may not appear.

Trademarks

The following terms are trademarks of the IBM Corporation in the United States or other countries or both:

- AD/Cycle
- AFP
- C/370
- DFSMS
- DFSMS/MVS
- DFSMShsm
- IBM
- IBMLink
- MVS/DFP
- MVS/ESA
- OS/390
- Print Services Facility
- RACF
- SP
- System/370
- VTAM

UNIX is a registered trademark in the United States and other countries licensed exclusively through X/Open Company Limited.

Other company, product, or service names may be trademarks or service marks of others.

Index

Special Characters

&LASTCC variable 1-284
&SYSABNCD 1-377
&SYSABNRC 1-377
&SYSCMDRC 1-377

Numerics

1403 printer 1-239
3203-5 Printer 1-240
3211 Printer 1-44, 1-217, 1-240
3800 Printer
  BURST/NOBURST operand
    ALLOCATE command 1-43
    OUTDES command 1-213
    PRINTDS command 1-236
  CHARS operand
    ALLOCATE command 1-43
    OUTDES command 1-213
  COPIES operand
    ALLOCATE command 1-43
    OUTDES command 1-214
    PRINTDS command 1-238
  FCB operand
    ALLOCATE command 1-44
    OUTDES command 1-216
    PRINTDS command 1-240
  FLASH operand
    ALLOCATE command 1-43
    OUTDES command 1-216
    PRINTDS command 1-240
  image_id operand
    ALLOCATE command 1-44
    PRINTDS command 1-240
  MODIFY operand
    ALLOCATE command 1-44
    OUTDES command 1-217
    PRINTDS command 1-242

A

abbreviating keyword operands 1-13
abbreviations
  for commands 2-4
ABSOLUTE operand
  SCROLL command 2-34
AC operand
  LINK command 1-182
ACCODE operand
  ALLOCATE command 1-33
ACS (automatic class selection) 1-21
ACTIVATE operand
  ALTLIB command 1-63
  TSOLIB command 1-379, 1-382
address operand
  AT subcommand of TEST 1-312
  CALL subcommand of TEST 1-317
  RUN subcommand of TEST 1-356
address_1 operand
  COPY subcommand of TEST 1-319
address_2 operand
  COPY subcommand of TEST 1-319
advanced function printer (AFP) 1-216
ALARM operand
  CHANGE.FUNCTION command 2-10
  CHANGE.STREAM command 2-14
  CHANGE.TERMINAL command 2-15
  CHANGE.WINDOW command 2-5, 2-16
ALIAS operand
  DELETE command 1-84
  LISTCAT command 1-192
  RENAME command 1-272
ALIGN operand
  ALLOCATE command 1-45
ALL operand
  ALTLIB command 1-64
  EDIT—CHANGE subcommand 1-96
  HELP command 1-171
  LISTCAT command 1-192
  PRINTDS command 1-241
  SMFIND command 1-285
ALLOCATE command 1-19, 1-40, 1-41, 1-42, 1-72, 1-73, 1-74
  operands 1-40, 1-41, 1-42, 1-72, 1-73, 1-74
    ACCODE 1-33
    ALIGN 1-45
    ALTFILE 1-32
    AVBLOCK 1-30
    AVGREC 1-30
    BFALN 1-39
    BFTEK 1-40
    BLKSIZE 1-31
    BLOCK 1-30
    BUFL 1-37
    BUFNO 1-37
    BUFOFF 1-41
    BURST 1-43
    CATALOG 1-37
    CHARS 1-43
    COPIES 1-43
    CYLINDERS 1-30
    DATACLAS 1-28
    DDNAME 1-26
    DELETE 1-37

© Copyright IBM Corp. 1988, 1999

ALLOCATE command *(continued)*
operands *(continued)*
DEN 1-41, 1-73
DEST 1-32
DIAGNS 1-41
DIR 1-32
DSNTYPE 1-46
DSORG 1-41
DUMMY 1-25
EROPT 1-40
EXPDT 1-39
FCB 1-44
FILE 1-26
FILEDATA 1-50
FLASH 1-43
FORMS 1-45
HOLD 1-32
image_id 1-44
INPUT 1-38
KEEP 1-37
KEYLEN 1-42
KEYOFF 1-42
LABEL 1-33
LIKE 1-34
LIMCT 1-41
LRECL 1-38
MAXVOL 1-33
MGMTCLAS 1-28
MOD 1-26
MODIFY 1-44
NCP 1-38
NEW 1-26
NOBURST 1-43
NOHOLD 1-32
OLD 1-26
OPTCD 1-39
OSYNC 1-50
OTRUNC 1-50
OUTDES 1-45
OUTPUT 1-38
PARALLEL 1-33
PATH 1-46
PATHDISP 1-47
PATHMODE 1-48
PATHOPTS 1-49
POSITION 1-33
PRIVATE 1-34
PROTECT 1-43
RECFM 1-40, 1-72
RECORG 1-42
REFDD 1-35
RELEASE 1-37
RETPD 1-39
REUSE 1-32
RLS 1-51
ROUND 1-37
SECMODEL 1-36

ALLOCATE command *(continued)*
operands *(continued)*
SEGMENT 1-45
SHR 1-26
SPACE 1-29
SPIN 1-45
STORCLAS 1-28
SYSOUT 1-27
TRACKS 1-30
TRTCH 1-42, 1-74
UCOUNT 1-33
UCS 1-46
UNCATALOG 1-37
UNIT 1-32
USING 1-35
VERIFY 1-45
VOLUME 1-27
VSEQ 1-34
WRITER 1-46
ALLOCATE command under TEST 1-305
ALLOCATE subcommand of EDIT 1-94
allocation attributes 1-28
allocation of SMS data sets 1-20
ALLOCATION operand
LISTCAT command 1-193
ALTFILE operand
ALLOCATE command 1-32
ALTLIB command 1-59
in concurrent applications 1-60
in ISPF 1-60
in most applications 1-60
in the IPCS dialog 1-61
search order for libraries 1-59
stacking application-level requests 1-61
AMODE operand
CALL subcommand of TEST 1-318
GO subcommand of TEST 1-330, 1-356
LINK command 1-175
LOADGO command 1-198
RUN subcommand of TEST 1-356
AMOUNT operand
SCROLL command 2-35
AND subcommand of TEST 1-305
ANY operand
SMFIND command 1-285
APPC/MVS transaction program, using TEST command 1-298
APPLICATION operand
ALTLIB command 1-63
ASIS operand
CALL command 1-77
EDIT command 1-90
SMCOPY command 1-283
SMFIND command 1-285
ASM command
EDIT command 1-88

ASM command *(continued)*
RUN command 1-273
assignment of values function of TEST 1-308
AT subcommand of TEST 1-312
address 1-313
COUNT 1-314
DEFER 1-314
NOTIFY 1-314
subcommands 1-314
TITLE 1-315
ATTRIB
command 1-67
command under TEST 1-316
subcommand of EDIT 1-94
ATTRIB command 1-40, 1-41, 1-42, 1-72, 1-73, 1-74
operands 1-40, 1-41, 1-42, 1-72, 1-73, 1-74
DEN 1-41, 1-73
RECFM 1-40, 1-72
TRTCH 1-42, 1-74
attributes, allocation 1-28
ATTRLIST operand
FREE command 1-163
authorized command, running in unauthorized environment 1-377
automatic class selection routine 1-20
AVBLOCK operand
ALLOCATE command 1-30
AVGREC operand
ALLOCATE command 1-30

B

background behavior of command
CALL 1-76
LOGOFF 1-203
LOGON 1-206
PROFILE 1-253
SUBMIT 1-288
BACKWARD operand
FIND command 2-23
SCROLL command 2-34
SMFIND command 1-285
BASELU operand
TEST command 1-300
batch processing, cancelling jobs 1-79
BEGIN operand
CONTINUE subcommand of OUTPUT 1-231
OUTPUT command 1-227
BFALN operand
ALLOCATE command 1-39
ATTRIB command 1-71
BFTEK operand
ALLOCATE command 1-40
ATTRIB command 1-72
BIND operand
PRINTDS command 1-236
BINDER operand
LINK command 1-175
LOADGO command 1-199
BLKSIZE operand
ALLOCATE command 1-31
ATTRIB command 1-69
RECEIVE command 1-264
BLOCK operand
ALLOCATE command 1-30
EDIT command 1-90
RECEIVE command 1-264
BMARGIN operand
PRINTDS command 1-236
BOTTOM subcommand of EDIT 1-94
BREAK operand
TERMINAL command 1-295
BUFL (buffer_length) operand
ALLOCATE command 1-37
ATTRIB command 1-69
BUFNO (number_of_buffers) operand
ALLOCATE command 1-37
ATTRIB command 1-69
BUFOFF (block_prefix_length) operand
ALLOCATE command 1-41
ATTRIB command 1-73
BURST operand
ALLOCATE command 1-43
OUTDES command 1-213
PRINTDS command 1-236

C

CALL command 1-75
CALL operand
LINK command 1-175
LOADGO command 1-201
CALL subcommand of TEST 1-317
CANCEL command 1-79
CANCEL command under TEST 1-319
CAPS operand
CALL command 1-77
EDIT command 1-90
SMCOPY command 1-283
CASE operand
LINK command 1-175
LOADGO command 1-199
CATALOG operand
ALLOCATE command 1-37
DELETE command 1-83
LISTCAT command 1-190
LISTDS command 1-195
CCHAR operand
PRINTDS command 1-237
CHANGE subcommand of EDIT 1-94
CHANGE.CURSOR command 2-7

CHANGE.FUNCTION command 2-8
CHANGE.MODE command 2-11
CHANGE.PFK command 2-12
CHANGE.STREAM command 2-13
CHANGE.TERMINAL command 2-14
CHANGE.WINDOW command 2-16
CHAR operand
  PROFILE command 1-250
  TERMINAL command 1-296
character arrangement table 1-213
CHARS operand
  ALLOCATE command 1-43
  OUTDES command 1-213
  PRINTDS command 1-238
CHECK operand
  RUN command 1-274
  RUN subcommand of EDIT 1-129
CKPOINT subcommand of EDIT 1-99
CKPTLINE operand
  OUTDES command 1-213
CKPTPAGE operand
  OUTDES command 1-213
CKPTSEC operand
  OUTDES command 1-214
CLASS operand
  OUTDES command 1-214
  OUTPUT command 1-226
  PRINTDS command 1-238
classes, SMS 1-20
CLEAR key, use of 2-3
CLEAR operand
  CHANGE.STREAM command 2-14
  TERMINAL command 1-295
CLIST operand
  EDIT command 1-88
  executing with EXEC command 1-142
CLUSTER operand
  DELETE command 1-84
  LISTCAT command 1-192
CN operand
  SEND command 1-278
CNTL operand
  EDIT command 1-88
COBLIB operand
  LINK command 1-178
  LOADGO command 1-200
COBOL operand
  EDIT command 1-88
  RUN command 1-274
Code and Go FORTRAN
  EDIT command 1-89
column operand
  CHANGE.CURSOR command 2-7
  DEFINE.WINDOW command 2-19
COLUMNS operand
  PRINTDS command 1-238
COLUMNS operand *(continued)*
  SCROLL command 2-35
command modifier, definition 2-3
command name, definition 2-3
comments 1-14
COMPACT operand
  OUTDES command 1-214
compaction table 1-214
compiler type, determining 1-275
COND operand
  ALTLIB command 1-64
  TSOLIB command 1-381, 1-383
constructs of data sets 1-21
CONTINUE subcommand of OUTPUT 1-231
CONTROL operand
  abbreviation 2-5
  CHANGE.TERMINAL command 2-15
  OUTDES command 1-214
control section tags 1-372
control_password operand
  PROTECT command 1-257
COPIES operand
  ALLOCATE command 1-43
  OUTDES command 1-214
  PRINTDS command 1-238
copy modification module 1-217, 1-242
COPY operand
  CHANGE.FUNCTION command 2-9
  RECEIVE command 1-265
COPY subcommand of
  EDIT command 1-101
  TEST command 1-319
COPYLIST operand
  TRANSMIT command 1-365
count operand
  CHANGE subcommand of EDIT 1-94
  COPY subcommand of EDIT 1-102
  DELETE subcommand of EDIT 1-108
  DOWN subcommand of EDIT 1-110
  LIST subcommand of EDIT 1-118
  MOVE subcommand of EDIT 1-121
  SCAN subcommand of EDIT 1-133
  UP subcommand of EDIT 1-140
CP operand
  TEST command 1-300
CREATION operand
  LISTCAT command 1-192
cursor
  changing the location of 2-7
  permanent location 2-7
  temporary location 2-7
CYLINDER operand
  ALLOCATE command 1-30
  RECEIVE command 1-264

D

data check errors 1-215
data class for data set 1-28
data class, definition of 1-20
data encryption (TRANSMIT and RECEIVE) 1-369
Data Facility Hierarchical Storage Manager (DFHSM) 1-20
DATA operand
  LISTCAT command 1-192
  PROTECT command 1-258
data set
  formatting 1-233
  printing 1-233
  profile, RACF 1-36
  RACF protected 1-43
  with Storage Management Subsystem 1-20
data_set_name operand
  ALLOCATE command 1-24
  LINK command 1-174
  LISTDS command 1-194
  LOADGO command 1-198
  PRINTDS command 1-236
  PROTECT command 1-257
  SAVE subcommand of EDIT 1-131
DATACK operand
  OUTDES command 1-215
DATACLAS operand
  ALLOCATE command 1-28
DATASET operand
  ALLOCATE command 1-24
  ALTLIB command 1-64
  FREE command 1-163
  PRINTDS command 1-236
  RECEIVE command 1-263
  TRANSMIT command 1-363
  TSOLIB command 1-382
  VLFNOTE command 1-389
DC operand
  LINK command 1-181
DCBS operand
  LINK command 1-182
DCF (see Document Composition Facility) 1-234
DCF operand
  PRINTDS command 1-239
DDNAME operand
  ALLOCATE command 1-26
  ALTLIB command 1-64
  FREE command 1-163
  PRINTDS command 1-236
  TRANSMIT command 1-363
  TSOLIB command 1-382
DEACTIVATE operand
  ALTLIB command 1-63
  TSOLIB command 1-379, 1-382
DEFAULT operand
  CHANGE.TERMINAL command 2-15
  OUTDES command 1-215
default window 2-4, 2-14
DEFINE.WINDOW command 2-18
defining allocation attributes 1-28
defining output descriptors 1-210
definition_text_string operand
  CHANGE.PFK command 2-12
DELETE command 1-81
DELETE operand
  ALLOCATE command 1-37
  FREE command 1-164
  OUTPUT command 1-228
  PROTECT command 1-257
  RECEIVE command 1-265
DELETE subcommand of
  EDIT command 1-108
  TEST command 1-322
DELETE.WINDOW command 2-22
delimiter 1-15
delimiter operand
  CHANGE.PFK command 2-13
DEN operand 1-41, 1-73
  ALLOCATE command 1-41, 1-73
  ATTRIB command 1-41, 1-73
DEST operand
  ALLOCATE command 1-32
  FREE command 1-163
  OUTDES command 1-215
  OUTPUT command 1-228
  PRINTDS command 1-239
determining compiler type 1-275
device number 1-33
  four-digit device support 1-33
DFHSM (see Data Facility Hierarchical Storage Manager) 1-20
diagnostic information 1-209
DIAGNS (TRACE) operand
  ALLOCATE command 1-41
  ATTRIB command 1-73
DIR operand
  ALLOCATE command 1-32
directory operand
  PRINTDS command 1-241
  RECEIVE command 1-264
DISCONNECT operand
  LOGOFF command 1-203
discrete data set profile 1-36
DISPLAY operand
  ALTLIB command 1-63
  RECEIVE command 1-261
  TSOLIB command 1-379, 1-383
displaying
  allocated data sets 1-183
  contents of broadcast data set 1-187

Document Composition Facility (DCF) 1-234
DOUBLE operand
PRINTDS command 1-237
DOWN subcommand of EDIT 1-110
DPAGELBL operand
OUTDES command 1-216
DROP subcommand of TEST 1-323
DSNAME operand
ALLOCATE command 1-24
ALTLIB command 1-64
CALL command 1-76
EDIT command 1-86
FREE command 1-163
PRINTDS command 1-236
RECEIVE command 1-263
TRANSMIT command 1-363
TSOLIB command 1-382
VLFNOTE command 1-389
DSNMAP command (VM/PC user) 1-209
DSNTYPE operand
ALLOCATE command 1-46
DSORG operand
ALLOCATE command 1-41
ATTRIB command 1-73
DUMMY operand
ALLOCATE command 1-25

E

EDIT command
subcommands
ALLOCATE 1-94
ATTRIB 1-94
BOTTOM 1-94
CHANGE 1-94
CKPOINT 1-99
COPY 1-101
DELETE 1-108
DOWN 1-110
END 1-111
FIND 1-111
FREE 1-113
HELP 1-113
INPUT 1-113
INSERT 1-115
insert/replace/delete function 1-117
LIST 1-118
MOVE 1-120
PROFILE 1-126
RENUM 1-126
RUN 1-128
SAVE 1-131
SCAN 1-133
SEND 1-134
SUBMIT 1-134
TABSET 1-137
TOP 1-139
EDIT command *(continued)*
subcommands *(continued)*
UNNUM 1-140
UP 1-140
VERIFY 1-141
EMODE operand
EDIT command 1-86
ENCIPHER operand
TRANSMIT command 1-365
encryption, data (TRANSMIT and RECEIVE) 1-369
END command 1-142, 2-22
END operand
RECEIVE command 1-265
WHEN command 1-392
END subcommand of
EDIT command 1-111
OUTPUT command 1-232
TEST command 1-324
end_line_number operand
SAVE subcommand of EDIT 1-132
ENTRIES operand
LISTCAT command 1-191
EP operand
LOADGO command 1-202
EPILOG operand
TRANSMIT command 1-365
EQUATE operand
address 1-324
data_type 1-325
LENGTH 1-325
MULTIPLE 1-325
symbol 1-324
EQUATE subcommand of TEST 1-324
ERASE operand
DELETE command 1-83
EROPT operand
ALLOCATE command 1-40
ATTRIB command 1-72
EXEC command 1-142
EXEC as a subcommand 1-143
EXEC command under TEST 1-326
EXEC subcommand of EDIT 1-111
EXECUTIL command 1-155
executing CLIST, EXEC command 1-142
EXPDT (year_day) operand
ALLOCATE command 1-39
ATTRIB command 1-71
EXPIRATION operand
LISTCAT command 1-192
explicit form of EXEC command 1-142
extended implicit form of EXEC 1-142
external writer name 1-46, 1-220, 1-244

F

FCB operand
  ALLOCATE command 1-44
  OUTDES command 1-216
  PRINTDS command 1-240
FETCHOPT operand
  LINK command 1-176
FIB commands
  See foreground-initiated-background (FIB) commands
FILE operand
  ALLOCATE command 1-26
  ALTLIB command 1-64
  DELETE command 1-83
  FREE command 1-163
  PRINTDS command 1-236
  TRANSMIT command 1-363
  TSOLIB command 1-382
FILEDATA operand
  ALLOCATE command 1-50
FIND command 2-23
FIND subcommand of EDIT 1-111
FIRST operand
  SMFIND command 1-285
FLASH operand
  ALLOCATE command 1-43
  OUTDES command 1-216
  PRINTDS command 1-240
flash overlay 1-43, 1-216, 1-240
FOLD operand
  PRINTDS command 1-240
foreground-initiated-background (FIB) commands
  CANCEL 1-80
  OUTPUT 1-225
  STATUS 1-287
  SUBMIT 1-289
format of commands 2-3
FORMAT operand
  abbreviation 2-5
  SMCOPY command 1-283
  SNAPSHOT command 2-36
FORMDEF operand
  OUTDES command 1-216
forms control buffer (FCB) 1-44, 1-216
FORMS operand
  ALLOCATE command 1-45
  OUTDES command 1-216
  PRINTDS command 1-240
FORT operand
  RUN command 1-274
FORTG operand
  EDIT command 1-88
FORTGE operand
  EDIT command 1-88
FORTGI operand
  EDIT command 1-88
FORTH operand
  EDIT command 1-89
FORTLIB operand
  LINK command 1-177
  LOADGO command 1-200
FORTRAN
  (H) compiler 1-133
  Code and Go 1-89
  IV (E) 1-88
  IV (G) 1-88
  IV (G1) 1-88
  IV (H) EXTCOMP statements 1-89
FORWARD operand
  FIND command 2-24
  SCROLL command 2-35
  SMFIND command 1-285
four-digit device support 1-33
  See also device number
FREE command 1-162
  operands
    PATH 1-165
    PATHDISP 1-165
FREE subcommand of EDIT 1-113
freeing list of output descriptor names 1-164
FREEMAIN subcommand of TEST 1-327
FROMDATASET operand
  SMCOPY command 1-282
FROMSTREAM operand
  SMCOPY command 1-282
FULLSCREEN
  logon 1-205
  operand of TRANSMIT command 1-365
FUNCTION operand
  HELP command 1-170
  QUERY command 2-26

G

GENERATIONDATAGROUP operand
  DELETE command 1-84
  LISTCAT command 1-192
generic data set profile 1-36
GETMAIN subcommand of TEST 1-328
GETMAIN, operands of TEST
  EQUATE 1-329
  integer 1-328
  LOC(ANY) 1-329
  LOC(BELOW) 1-329
  LOC(RES) 1-329
  SP 1-328
GO operand
  RUN command 1-275
GO subcommand of TEST 1-329

GOFORT operand
EDIT command 1-89
RUN command 1-274
GROUP operand
LOGON command 1-208
GROUPID operand
OUTDES command 1-217

H

HALF operand
SCROLL command 2-35
halt processing of batch jobs 1-79
HELP command 1-167
HELP command under TEST 1-331
help information 1-168
HELP subcommand of
EDIT command 1-113
OUTPUT command 1-232
help text, specifying languages for 1-252
HELP, using 1-15
HERE operand
CONTINUE subcommand of OUTPUT 1-231
OUTPUT command 1-227
UNLOCK command 2-37
HIAR operand
LINK command 1-181, 1-182
hierarchy assignments 1-181
HISTORY operand
LISTALC command 1-184
LISTCAT command 1-193
LISTDS command 1-195
HOLD operand
ALLOCATE command 1-32
CHANGE.WINDOW command 2-5, 2-16
DEFINE.WINDOW command 2-20
FREE command 1-164
LOGOFF command 1-203
OUTPUT command 1-227
PRINTDS command 1-240
host computer 1-209

I

I operand, INPUT subcommand of EDIT 1-113
IBM host computer 1-209
IBM Personal Computer 1-209
identifier operand
CHANGE.PFK command 2-12
image_id of ALLOCATE command 1-44
IMODE operand
EDIT command 1-87
implicit form of EXEC command 1-142
INCR operand
COPY subcommand of EDIT 1-101
MOVE subcommand of EDIT 1-120
increment operand
INPUT subcommand of EDIT 1-113
RENUM subcommand of EDIT 1-126
INDATASET operand
RECEIVE command 1-261
INDDNAME operand
RECEIVE command 1-261
INDEX operand
LISTCAT command 1-192
OUTDES command 1-217
INDSNAME operand
RECEIVE command 1-261
INFILE operand
RECEIVE command 1-261
INPUT operand
ALLOCATE command 1-38
ATTRIB command 1-70
CHANGE.FUNCTION command 2-9, 2-10
CHANGE.WINDOW command 2-16
DEFINE.WINDOW command 2-20
INPUT subcommand of EDIT 1-113
INSERT subcommand of EDIT 1-115
insert/replace/delete function of EDIT 1-117
INTENSITY operand
CHANGE.FUNCTION command 2-10
PUT command 2-25
SMPUT command 1-287
INTERCOM operand
PROFILE command 1-251
IOTRACE operand
MVSSERV command 1-210

J

JES printers 1-233

K

KEEP operand
ALLOCATE command 1-37
FREE command 1-164
OUTPUT command 1-227
KEEPTP operand
TEST command 1-300
KEYLEN operand
ALLOCATE command 1-42
ATTRIB command 1-74
KEYOFF operand
ALLOCATE command 1-42
keyword operand 1-11, 1-13, 2-3

L

LABEL operand
ALLOCATE command 1-33
LISTDS command 1-195

language
PLANGUAGE operand
PROFILE command 1-252
primary
PROFILE command 1-252
secondary
PROFILE command 1-252
SLANGUAGE operand
PROFILE command 1-252
LEFT operand
SCROLL command 2-35
LENGTH operand
COPY subcommand of TEST 1-320
LET operand
LINK command 1-178
LOADGO command 1-201
LEVEL operand
LISTCAT command 1-191
LISTDS command 1-195
LIB operand
LINK command 1-177
LOADGO command 1-199
RUN command 1-274
RUN subcommand of EDIT 1-130
LIBRARY operand
ALTLIB command 1-64
TSOLIB command 1-382
LIKE operand
ALLOCATE command 1-34
LIMCT (search_number) operand
ALLOCATE command 1-41
ATTRIB command 1-73
LINDEX operand
OUTDES command 1-217
line continuation 1-14
line mode logon 1-204
line numbers, location 1-242
LINE operand
CHANGE.WINDOW command 2-17
DEFINE.WINDOW command 2-21
FIND command 2-24
SMCOPY command 1-284
SMFIND command 1-285
TRANSMIT command 1-365
line_1 operand
COPY subcommand of EDIT 1-101
MOVE subcommand of EDIT 1-120
line_2 operand
COPY subcommand of EDIT 1-101
MOVE subcommand of EDIT 1-120
line_3 operand
COPY subcommand of EDIT 1-101
MOVE subcommand of EDIT 1-120
line_4 operand
COPY subcommand of EDIT 1-102
MOVE subcommand of EDIT 1-121
line_number operand
INPUT subcommand of EDIT 1-113
SCROLL command 2-34
line_number_1 operand
CHANGE subcommand of EDIT 1-95
DELETE subcommand of EDIT 1-109
LIST subcommand of EDIT 1-118
SCAN subcommand of EDIT 1-133
line_number_2 operand
CHANGE subcommand of EDIT 1-95
DELETE subcommand of EDIT 1-109
LIST subcommand of EDIT 1-118
SCAN subcommand of EDIT 1-133
LINECT operand
LINK command 1-178
LOADGO command 1-200
OUTDES command 1-217
LINES operand
DEFINE.WINDOW command 2-19
PRINTDS command 1-240
SCROLL command 2-34
LINK command 1-172
operands
BINDER 1-175
CALL 1-175
HIAR 1-181, 1-182
NCAL 1-175
NOBINDER 1-175
NONCAL 1-175
LINK command under TEST 1-331
LIST operand
EXEC command 1-145
LINK command 1-179
LOADGO command 1-200
LIST subcommand of
EDIT 1-118
TEST 1-331
LIST, operands of TEST
address 1-331
ALET 1-333
AR 1-333
data_type 1-332
LENGTH 1-334
MULTIPLE 1-334
PRINT 1-334
LISTALC command 1-183
LISTALC command under TEST 1-337
LISTBC command 1-187
LISTBC command under TEST 1-338
LISTCAT command 1-189
LISTCAT command under TEST 1-338
LISTDCB subcommand of TEST 1-338
LISTDS command 1-193
LISTDS command under TEST 1-341
LISTMAP subcommand of TEST 1-341

LISTPSW operands of TEST
ADDR 1-343
PRINT 1-343
LISTPSW subcommand of TEST 1-342
LISTVP subcommand of TEST 1-346
LISTVSR subcommand of TEST 1-346
LMARGIN of PRINTDS 1-236
LMSG operand on RUN subcommand of EDIT 1-128
LOAD subcommand of TEST 1-347
LOADGO command
description 1-196
operands
CALL 1-201
COBLIB 1-200
data-set-list 1-198
FORTLIB 1-200
LIB 1-199
MAP 1-201
NAME 1-202
NOCALL 1-201
NOMAP 1-201
NOPRINT 1-198
NORES 1-201
NOTERM 1-201
PLIBASE 1-200
PLICMIX 1-200
PLILIB 1-200
PRINT 1-198
RES 1-201
TERM 1-201
LOG operand
TRANSMIT command 1-366
LOG(ALL) operand
TRANSMIT command 1-366
LOGDATASET operand
RECEIVE command 1-261
TRANSMIT command 1-366
LOGDSNAME operand
RECEIVE command 1-261
TRANSMIT command 1-366
logging function of TRANSMIT and RECEIVE 1-370
LOGNAME operand
TRANSMIT command 1-366
LOGOFF command 1-203
LOGON command 1-204
LOGON, full-screen 1-205
LPREC operand
RUN command 1-274
LRECL (logical_record_length) operand
ALLOCATE command 1-38
ATTRIB command 1-70
EDIT command 1-90
LU operand
TEST command 1-300

M

MAIL operand
LISTBC command 1-188
LOGON command 1-207
management class of data set 1-28
management class, definition of 1-20
managing data sets 1-20
MAP operand
LINK command 1-178
MAX operand
SCROLL command 2-35
MAXVOL operand
ALLOCATE command 1-33
media destination 1-221
members of PDS, printing 1-233
MEMBERS operand
LISTALC command 1-184
LISTDS command 1-195
PRINTDS command 1-241
TRANSMIT command 1-366
message (MSG) function, change the streams for 2-8
MESSAGE operand
TRANSMIT command 1-365
MGMTCLAS operand
ALLOCATE command 1-28
RECEIVE command 1-265
MOD operand
ALLOCATE command 1-26
RECEIVE command 1-264
MODE operand
PROFILE command 1-251
model data set profile 1-36
MODIFY operand
ALLOCATE command 1-44
OUTDES command 1-217
PRINTDS command 1-242
module call 1-209
MOVE subcommand of EDIT 1-120
MSG operand
CHANGE.FUNCTION command 2-9
MSGDATASET operand
TRANSMIT command 1-364
MSGDDNAME operand
TRANSMIT command 1-364
MSGDSNAME operand
TRANSMIT command 1-364
MSGFILE operand
TRANSMIT command 1-364
MSGID (list) operand
HELP command 1-171
PROFILE command 1-251
MSGLEVEL operand
LINK command 1-179
LOADGO command 1-201

multiple output bin 1-221
MVSSERV command 1-209
diagnostic information 1-209
DSNMAP command 1-209
error messages 1-209
IBM Personal Computer 1-209
informational messages 1-209
IOTRACE operand 1-210
module calls 1-209
NOTRACE operand 1-209
syntax 1-209
terminal messages 1-209
trace data set 1-209
TRACE operand 1-209
TSO/E command 1-209
TSO/E Enhanced Connectivity Facility 1-209
VM/SP 1-209

N

name operand
LISTCAT command 1-193
NAMES data set
control section tags 1-372
function 1-371
nicknames section tags 1-373
NAMES operand
RECEIVE command 1-262
NCAL operand
LINK command 1-175
NCP operand
ALLOCATE command 1-38
ATTRIB command 1-70
NE operand
LINK command 1-181
NEW operand
ALLOCATE command 1-26
EDIT command 1-87
OUTDES command 1-213
RECEIVE command 1-264
new_line_number operand
RENUM subcommand of EDIT 1-126
SAVE subcommand of EDIT 1-131
new_name operand
RENAME command 1-272
NEWCLASS operand
OUTPUT command 1-228
NEWEST operand
CHANGE.WINDOW operand 2-17
DEFINE.WINDOW command 2-21
SCROLL command 2-35
UNLOCK command 2-37
NEXT operand on CONTINUE subcommand of OUTPUT 1-231
nicknames section tags 1-373
NO operand
CHANGE.FUNCTION command 2-10
NOBINDER operand
LINK command 1-175
LOADGO command 1-199
NOBURST operand
OUTDES command 1-213
PRINTDS command 1-237
NOCOPY operand
CHANGE.FUNCTION command 2-10
NOCP operand
TEST command 1-300
NODC operand
LINK command 1-181
NODCF operand
PRINTDS command 1-239
NODEFAULT operand
OUTDES command 1-215
NODISPLAY operand
RECEIVE command 1-262
NODPAGELBL operand
OUTDES command 1-216
NOENVB operand
CALL command 1-78
NOEPILOG operand
TRANSMIT command 1-365
NOERASE operand
DELETE command 1-83
NOFORMAT operand
SMCOPY command 1-283
NOGO operand
RUN command 1-275
RUN subcommand of EDIT 1-128
NOHOLD operand
ALLOCATE command 1-32
FREE command 1-164
OUTPUT command 1-228
PRINTDS command 1-240
NOINTERCOM operand
PROFILE command 1-251
NOKEEP operand
OUTPUT command 1-227
NOLET operand
LINK command 1-178
NOLINE operand
PROFILE command 1-251
NOLINES operand
TERMINAL command 1-294
NOLIST operand
EXEC command 1-145
NOLOG operand
TRANSMIT command 1-366
NOMAIL operand
LISTBC command 1-188
NOMAP operand
LINK command 1-178

NOMAP operand *(continued)*
LOADGO command 1-201
NOMODE operand
PROFILE command 1-251
NOMSGID operand
PROFILE command 1-251
non-VSAM data sets
TSO/E commands and subcommands 1-16
NONAMES operand
RECEIVE command 1-262
NONCAL operand
LINK command 1-175
NONE operand
LINK command 1-181
NONOTICES operand
LISTBC command 1-188
LOGON command 1-207
NONOTIFY operand
SUBMIT command 1-292
SUBMIT subcommand of EDIT 1-136
TRANSMIT command 1-366
NONUM operand
EDIT command 1-90
PRINTDS command 1-242
NONVSAM or NVSAM operand
DELETE command 1-84
LISTCAT command 1-192
NOOL operand
LINK command 1-181
NOOVLY operand
LINK command 1-180
NOPAUSE operand
CONTINUE subcommand of OUTPUT 1-232
OUTPUT command 1-227
PROFILE command 1-251
RUN command 1-275
RUN subcommand of EDIT 1-128
NOPOINTER operand
COPY subcommand of TEST 1-320
NOPOINTER operand on COPY subcommand of TEST 1-320
NOPREFIX operand
PROFILE command 1-252
NOPREVIEW operand
RECEIVE command 1-264
NOPRINT operand
LOADGO command 1-198
NOPROLOG operand
TRANSMIT command 1-367
NOPROMPT operand
INPUT subcommand of EDIT 1-113
PROFILE command 1-251
NOPURGE operand
CANCEL command 1-80
DELETE command 1-83
NOPWREAD operand
PROTECT command 1-258
NORECOVER operand
EDIT command 1-87
PROFILE command 1-250
NOREFR operand
LINK command 1-180
NORENT operand
LINK command 1-181
NORES operand
LOADGO command 1-201
NOREUS operand
LINK command 1-178
NOSAVE operand, END subcommand of EDIT 1-111
NOSCAN operand
EDIT command 1-89
NOSCRATCH operand
DELETE command 1-83
NOSCTR operand
LINK command 1-180
NOSECONDS operand
TERMINAL command 1-294
NOSTORE operand
RUN command 1-275
NOSYSAREA operand
OUTDES command 1-219
NOTERM operand
LINK command 1-182
LOADGO command 1-201
NOTEST operand
LINK command 1-181
RUN command 1-275
Notices A-1
NOTICES operand
LISTBC command 1-188
LOGON command 1-207
NOTIFY operand
SUBMIT command 1-292
SUBMIT subcommand of EDIT 1-136
TRANSMIT command 1-366
NOTIMEOUT operand
TERMINAL command 1-295
NOTITLE operand
PRINTDS command 1-243
NOTRAN operand
TERMINAL command 1-296
NOTRANS operand
SMCOPY command 1-283
NOTRC operand
OUTDES command 1-220
PRINTDS command 1-244
NOUSER operand
EDIT—SUBMIT subcommand 1-136
SUBMIT command 1-291
NOWAIT operand
SEND command 1-279

NOWRITE operand
PROTECT command 1-258
NOWTPMSG operand
PROFILE command 1-252
NOXCAL operand
LINK command 1-178
NOXREF operand
LINK command 1-178
NUM operand
EDIT command 1-89
PRINTDS command 1-242

O

OBJECT operand
RUN command 1-275
OFF operand
address 1-349
SCAN subcommand of EDIT 1-133
TABSET subcommand of EDIT 1-139
VERIFY subcommand of EDIT 1-141
OFF subcommand of TEST 1-349
OIDCARD operand
LOGON command 1-208
OL operand
LINK command 1-181
OLD operand
ALLOCATE command 1-26
EDIT command 1-87
RECEIVE command 1-264
old_line_number operand
SAVE subcommand of EDIT 1-132
old_name operand
RENAME command 1-271
OLDEST operand
SCROLL command 2-35
ON operand
SCAN subcommand of EDIT 1-133
TABSET subcommand of EDIT 1-137
VERIFY subcommand of EDIT 1-141
operand, description of
Session Manager 2-3
TSO/E 1-11
OPERANDS operand
HELP command 1-170
operator operand
WHEN command 1-391
OPT operand
RUN command 1-274
OPTCD operand
ALLOCATE command 1-39
ATTRIB command 1-71
OR subcommand of TEST, operands
address_1 1-350
address_2 1-351
LENGTH 1-351
OR subcommand of TEST, operands *(continued)*
POINTER 1-351
OSYNC operand
ALLOCATE command 1-50
OUTBIN operand
OUTDES command 1-221
OUTDATASET operand
TRANSMIT command 1-367
OUTDDNAME operand
TRANSMIT command 1-367
OUTDES command
operands 1-210
ADDRESS 1-213
BUILDING 1-213
BURST 1-213
CHARS 1-213
CKPTLINE 1-213
CKPTPAGE 1-213
CKPTSEC 1-214
CLASS 1-214
COMPACT 1-214
CONTROL 1-214
COPIES 1-214
DATACK 1-215
DEFAULT 1-215
DEPT 1-215
DEST 1-215
DPAGELBL 1-216
FCB 1-216
FLASH 1-216
FORMDEF 1-216
FORMS 1-216
GROUPID 1-217
INDEX 1-217
LINDEX 1-217
LINECT 1-217
MODIFY 1-217
NAME 1-217
NEW 1-213
NOBURST 1-213
NODEFAULT 1-215
NODPAGELBL 1-216
NOSYSAREA 1-219
NOTIFY 1-217
NOTRC 1-220
OUTBIN 1-221
OUTDISP 1-218
output descriptor name 1-212
PAGEDEF 1-218
PIMSG 1-219
PRMODE 1-219
PRTY 1-219
REUSE 1-213
ROOM 1-219
SYSAREA 1-219
TITLE 1-220
TRC 1-220

OUTDES command *(continued)*
operands *(continued)*
UCS 1-220
USERDATA 1-220
USERLIB 1-220
WRITER 1-220
PRINTDS command 1-242
OUTDES operand
ALLOCATE command 1-45
FREE command 1-164
OUTDSNAME operand
TRANSMIT command 1-367
OUTFILE operand
TRANSMIT command 1-367
output characteristics 1-234
output class 1-214
OUTPUT command 1-225
output descriptor name operand
OUTDES command 1-212
PRINTDS command 1-242
OUTPUT operand
ALLOCATE command 1-38
ATTRIB command 1-71
CHANGE.FUNCTION command 2-9, 2-10
output sequence 1-228
OUTPUT subcommands 1-231
OVERLAP operand
CHANGE.WINDOW command 2-5, 2-17
DEFINE.WINDOW command 2-20
OVLY operand
LINK command 1-180

P

page labeling 1-216
PAGE operand
CHANGE.WINDOW command 2-17
DEFINE.WINDOW command 2-21
SCROLL command 2-35
PAGEDEF operand
OUTDES command 1-218
PAGELEN operand
PRINTDS command 1-243
pages operand
SCROLL command 2-34
PAGESPACE operand
DELETE command 1-84
LISTCAT command 1-192
PARALLEL operand
ALLOCATE command 1-33
parameters operand
TEST command 1-299
PARM operand
RECEIVE command 1-261
TRANSMIT command 1-367
partitioned data set, printing 1-233
PASSENVB operand
CALL command 1-77
password
data set 1-259
DELETE command 1-83
EDIT command 1-86
operand of PROTECT command 1-257
password reprompt 1-206
PATH operand
ALLOCATE command 1-46
FREE command 1-165
PATHDISP operand
ALLOCATE command 1-47
FREE command 1-165
PATHMODE operand
ALLOCATE command 1-48
PATHOPTS operand
ALLOCATE command 1-49
PAUSE operand
CONTINUE subcommand of OUTPUT 1-232
OUTPUT command 1-227
PROFILE command 1-251
RUN command 1-275
RUN subcommand of EDIT 1-128
PDS operand
TRANSMIT command 1-367
personal computer 1-209
pfk_number operand
CHANGE.PFK command 2-3, 2-12
PFKS operand
QUERY command 2-27
RESTORE command 2-31
SAVE operand 2-32
PIMSG operand
OUTDES command 1-219
PLANGUAGE operand
PROFILE command 1-252
example 1-256
PLI operand
EDIT command 1-87
RUN command 1-274
PLIBASE operand
LINK command 1-177
LOADGO command 1-200
PLICMIX operand
LINK command 1-177
LOADGO command 1-200
PLIF operand
EDIT command 1-87
PLILIB operand
LOADGO command 1-200
POINTER operand
COPY subcommand of TEST 1-320
POINTER operand on COPY subcommand of TEST 1-320

POSITION operand
ALLOCATE command 1-33
position operand, FIND subcommand of EDIT 1-112
POSITIONAL operand 2-3
HELP command 1-170
positional operands 1-11
PREFIX operand
PROFILE command 1-252
PREFORMAT operand
SMCOPY command 1-283
PREVIEW operand
RECEIVE command 1-264
PRINT operand
LINK command 1-174
OUTPUT command 1-226
SMCOPY command 1-282
print services facility (PSF) 1-215
PRINTDS command 1-233
operands 1-233
ALL 1-241
BIND 1-236
BMARGIN 1-236
BURST 1-236
CCHAR 1-237
CHARS 1-238
CLASS 1-238
COLUMNS 1-238
COPIES 1-238
DCF 1-239
DDNAME 1-236
DEST 1-239
DIRECTORY 1-241
DOUBLE 1-237
FCB 1-240
FILE 1-236
FLASH 1-240
FOLD or TRUNCATE 1-240
FORMS 1-240
HOLD 1-240
LINES 1-240
LMARGIN 1-236
MEMBERS 1-241
MODIFY 1-242
NOBURST 1-237
NODCF 1-239
NOHOLD 1-240
NONUM 1-242
NUM 1-242
OUTDES 1-242
PAGELEN 1-243
SINGLE 1-237
SNUM 1-242
TITLE or NOTITLE 1-243
TMARGIN 1-244
TODATASET or TODSNAME 1-244
TRC or NOTRC 1-244
TRIPLE 1-237
PRINTDS command *(continued)*
operands *(continued)*
UCS 1-244
WRITER 1-244
printer support for SYSOUT data sets 1-45
printing on JES printers 1-233
priority, processing 1-219
PRIVATE operand
ALLOCATE command 1-34
PRMODE operand
OUTDES command 1-219
process mode 1-219
processing priority 1-219
PROFILE command 1-248
PROFILE command under TEST 1-353
PROFILE subcommand of EDIT 1-126
program function (PF) keys
defining 2-12
information displayed 2-27
uses 2-3
PROLOG operand
TRANSMIT command 1-367
PROMPT operand
INPUT subcommand of EDIT 1-113
PROFILE command 1-251
PROTECT command 1-256
dynamic UCB 1-256
PROTECT operand
ALLOCATE command 1-43
CHANGE.WINDOW command 2-5, 2-17
DEFINE.WINDOW command 2-20
PRTY operand
OUTDES command 1-219
PURGE operand
CANCEL command 1-80
DELETE command 1-83
purging jobs 1-80
PUT command 2-25
PWREAD operand
PROTECT command 1-258
PWWRITE operand
PROTECT command 1-258

Q

QUALIFY subcommand of TEST, operands
address 1-354
module_name.entry_name 1-354
TCB 1-354
QUERY command 2-26
QUIET operand
ALTLIB command 1-65
TSOLIB command 1-383
quoted string notation 1-96, 1-112

R

R operand, INPUT subcommand of EDIT 1-113
RACF data set profile 1-36
RACF job with user ID 1-253
RACF protected data set 1-43
  CHARS operand
    ALLOCATE command 1-43
reason codes, EXEC command 1-151
RECEIVE command
  data encryption function 1-369
  description 1-260
  logging function 1-370
RECFM operand 1-40, 1-72
  ALLOCATE command 1-40, 1-72
  ATTRIB command 1-40, 1-72
RECONNECT operand
  LOGON command 1-207
record format 1-40, 1-72, 1-236
RECORG operand
  ALLOCATE command 1-42
RECOVER operand
  EDIT command 1-87
  PROFILE command 1-250
recovering, EDIT command 1-87
REFDD operand
  ALLOCATE command 1-35
REFR operand
  LINK command 1-180
RELEASE operand
  ALLOCATE command 1-37
  RECEIVE command 1-264
RENAME command 1-271
RENAME command under TEST 1-356
RENT operand
  LINK command 1-180
RENUM operand
  SAVE subcommand of EDIT 1-132
RENUM subcommand of EDIT 1-126
REPLACE operand
  PROTECT command 1-257
requester 1-209
RES operand
  LOADGO command 1-201
RESET command 2-30
RESET operand
  ALTLIB command 1-63
  TSOLIB command 1-379, 1-383
RESTORE command 2-30
RESTORE operand
  RECEIVE command 1-265
RESUME operand
  UNLOCK command 2-37
RETPD (number_of_days) operand
  ALLOCATE command 1-39
  ATTRIB command 1-71
return codes
  ALLOCATE 1-51
  ATTRIB command 1-74
  CALL command 1-78
  CANCEL command 1-81
  CHANGE.CURSOR command 2-7
  CHANGE.FUNCTION command 2-10
  CHANGE.MODE command 2-11
  CHANGE.PFK command 2-13
  CHANGE.STREAM command 2-14
  CHANGE.TERMINAL command 2-15
  CHANGE.WINDOW command 2-18
  DEFINE.WINDOW command 2-21
  DELETE command 1-84
  DELETE.WINDOW command 2-22
  EDIT command 1-91
  EXEC command 1-151
  FIND command 2-24
  FREE command 1-166
  HELP command 1-171
  LINK command 1-182
  LISTALC command 1-185
  LISTBC command 1-188
  MVSSERV command 1-210
  OUTDES 1-222
  OUTPUT command 1-230
  PRINTDS command 1-247
  PROFILE command 1-255
  PROTECT command 1-259
  PUT command 2-26
  QUERY command 2-28
  RECEIVE command 1-266
  RENAME command 1-272
  RESET command 2-30
  RESTORE command 2-32
  RUN command 1-276
  SAVE command 2-33
  SCROLL command 2-36
  SEND command 1-279
  SMCOPY command 1-284
  SMFIND command 1-286
  SMPUT command 1-287
  SNAPSHOT command 2-37
  STATUS command 1-288
  SUBMIT command 1-292
  TERMINAL command 1-297
  TEST command 1-301
  TIME command 1-362
  TRANSMIT command 1-368
  TSOEXEC command 1-378
  TSOLIB command 1-384
  UNLOCK command 2-38
  VLFNOTE command 1-391
  WHEN command 1-392
REUS operand
  LINK command 1-178

REUSE operand
ALLOCATE command 1-32
OUTDES command 1-213
RIGHT operand
SCROLL command 2-35
RLS operand
ALLOCATE command 1-51
RMODE operand
LINK command 1-177
ROUND operand
ALLOCATE command 1-37
row operand
CHANGE.CURSOR command 2-7
DEFINE.WINDOW command 2-19
RUN command 1-272
RUN subcommand of
EDIT command 1-128
TEST command 1-356

S

SAVE command 2-32
SAVE subcommand of
EDIT command 1-131
OUTPUT command 1-232
SCAN operand
EDIT command 1-89
SCAN subcommand of EDIT 1-133
SCRATCH operand
DELETE command 1-83
screen layout, Session Manager
information restored 2-31
information saved 2-32
SCREEN operand
RESTORE command 2-31
SAVE command 2-32
SCROLL command 2-33
SCRSIZE operand
TERMINAL command 1-296
SCTR operand
LINK command 1-180
SECLABEL operand
See also security label
LOGON command 1-207
SECMODEL operand
ALLOCATE command 1-36
SECONDS operand
TERMINAL command 1-294
security label
cancelling jobs 1-80
for submitting jobs 1-288
LISTBC command
message processing 1-187
on job statement 1-288
on LOGON command 1-207
on output pages 1-216, 1-219
security label *(continued)*
processing job output 1-225
RECEIVE command
message processing 1-268
SEND command
message processing 1-277
TRANSMIT command
message processing 1-369
SEND command 1-276
SEND command under TEST 1-357
sequential data set, printing 1-233
SEQUENTIAL operand
TRANSMIT command 1-367
server 1-209
service request 1-209
session functions
change the streams for 2-8
information displayed 2-26
message (MSG) 2-8
Session Manager (SM) 2-8
TSO/E 2-8
Session Manager
commands
CHANGE.CURSOR 2-7
CHANGE.FUNCTION 2-8
CHANGE.MODE 2-11
CHANGE.PFK 2-3, 2-12
CHANGE.STREAM 2-13
CHANGE.TERMINAL 2-4, 2-14
CHANGE.WINDOW 2-5, 2-16
DEFINE 2-4
DEFINE.WINDOW 2-18
DELETE 2-4
DELETE.WINDOW 2-22
description 2-2
END 2-22
FIND 2-23
format 2-3
how to enter 2-3
PUT 2-25
QUERY 2-26
QUERY.STREAMS 2-13
RESET 2-30
RESTORE 2-4, 2-30
SAVE 2-32
SCROLL 2-4, 2-33
SMCOPY 1-281
SMFIND 1-284
SMPUT 1-286
SNAPSHOT 2-36
summary 2-5
UNLOCK 2-37
VS/APL 2-11
session function, change the streams for 2-8
SHR operand
ALLOCATE command 1-26

SHR operand *(continued)*
RECEIVE command 1-264
SINGLE operand
PRINTDS command 1-237
SIZE operand
LINK command 1-181
RUN command 1-275
RUN subcommand of EDIT 1-130
SLANGUAGE operand
PROFILE command 1-252
example 1-256
SM operand
CHANGE.FUNCTION command 2-9
SMCOPY command 1-281
SMFIND command 1-284
SMPUT command 1-286
SMS classes 1-20
SMS data set 1-20
SMS-managed data set 1-28
SMSG operand on RUN subcommand of EDIT 1-128
SNAPSHOT command 2-36
SNUM operand
LIST subcommand of EDIT 1-118
PRINTDS command 1-242
SOURCE operand
RUN command 1-275
source statements, running 1-272
SPACE operand
ALLOCATE command 1-29
DELETE command 1-84
LISTCAT command 1-192
RECEIVE command 1-263
SPIN operand
FREE command 1-165
SPREC operand
RUN command 1-275
SSI operand
LINK command 1-180
STATUS command 1-287
STATUS command under TEST 1-358
STATUS operand
LISTALC command 1-184
LISTDS command 1-194
storage administrator, role of 1-20
storage class for data set 1-28
storage class, definition of 1-20
Storage Management Subsystem classes 1-20
Storage Management Subsystem data set 1-20
STORCLAS operand
ALLOCATE command 1-28
RECEIVE command 1-265
STORE operand
RUN command 1-275
RUN subcommand of EDIT 1-130
STREAM operand
SMFIND command 1-285
stream_name operand
CHANGE.FUNCTION command 2-9
CHANGE.PFK command 2-12
CHANGE.STREAM command 2-14
CHANGE.WINDOW command 2-17
FIND command 2-24
PUT command 2-25
QUERY command 2-28
SMPUT command 1-286
SNAPSHOT command 2-36
STREAMS operand
QUERY command 2-27
streams, information displayed 2-27
string operand
CHANGE subcommand of EDIT 1-95
COPY subcommand of EDIT 1-102
FIND subcommand of EDIT 1-112
insert/replace/delete function of EDIT 1-117
MOVE subcommand of EDIT 1-121
SUBMIT
command 1-288
subcommand of EDIT 1-134
support in batch 1-288
under TEST 1-358
SUBSTITUTE operand
CHANGE.PFK command 2-12
summary of
Session Manager commands 2-5
TSO/E commands 1-17
surrogate job submission 1-289
syntax diagrams 1-12
SYNTAX operand
HELP command 1-170
syntax rules for
Session Manager commands 2-4
TSO/E commands and subcommands 1-11
SYSABNCD 1-378
SYSABNRC 1-378
SYSAREA operand
OUTDES command 1-219
SYSCMDRC 1-378
SYSNAMES operand
LISTALC command 1-185
SYSOUT operand
ALLOCATE command 1-27
PRINTDS command 1-238
RECEIVE command 1-264
TRANSMIT command 1-367
SYSRC operand
WHEN command 1-391
system area 1-219
SYSTEM operand
ALTLIB command 1-64
system printable area 1-219

T

table reference character 1-220, 1-244
TABSET subcommand of EDIT 1-137
tag definitions
  control section 1-372
  nicknames section 1-373
TARGET operand
  CHANGE.WINDOW command 2-5, 2-17
  DEFINE.WINDOW command 2-20
  FIND command 2-24
TEMPORARY operand
  CHANGE.CURSOR command 2-7
TERM operand
  LINK command 1-182
  LOADGO command 1-201
TERMINAL command 1-293
TERMINAL command under TEST 1-359
TERMINAL operand
  QUERY command 2-27
  TRANSMIT command 1-364
terminal, information displayed (Session Manager) 2-27
TEST
  commands under TEST
    ALLOCATE 1-305
    ATTRIB 1-316
    CANCEL 1-319
    EXEC 1-326
    LINK 1-331
    LISTALC 1-337
    LISTBC 1-338
    LISTCAT 1-338
    LISTDS 1-341
    PROFILE 1-353
    PROTECT 1-353
    RENAME 1-356
    SEND 1-357
    STATUS 1-358
    SUBMIT 1-358
    TERMINAL 1-359
    UNALLOC 1-359
  subcommands
    AND 1-305
    AT 1-312
    CALL 1-317
    COPY 1-319
    DELETE 1-322
    DROP 1-323
    END 1-324
    EQUATE 1-324
    FREEMAIN 1-327
    GETMAIN 1-328
    GO 1-329
    HELP 1-331
    LIST 1-331
    list of 1-303
TEST *(continued)*
  subcommands *(continued)*
    LISTDCB 1-338
    LISTDEB 1-339
    LISTMAP 1-341
    LISTPSW 1-342
    LISTTCB 1-344
    LISTVP 1-346
    LISTVSR 1-346
    LOAD 1-347
    OFF 1-349
    OR 1-350
    QUALIFY 1-353
    RUN 1-356
    SETVSR 1-357
    WHERE 1-359
TEST operand
  RUN command 1-275
TEXT operand
  EDIT command 1-88
  SEND command 1-278
text_string operand
  FIND command 2-24
  PUT command 2-25
  SMFIND command 1-285
  SMPUT command 1-286
TIME command 1-361
TIMEOUT operand
  TERMINAL command 1-295
TITLE operand
  PRINTDS command 1-243
TMARGIN operand
  PRINTDS command 1-244
TMP initialization in background 1-253
TODATASET operand
  PRINTDS command 1-244
  SMCOPY command 1-282
TOP subcommand of EDIT 1-139
TOSTREAM operand
  SMCOPY command 1-283
TP operand
  TEST command 1-300
trace data set 1-209
TRACE operand
  MVSSERV command 1-209
TRACKS operand
  ALLOCATE command 1-30
  RECEIVE command 1-264
TRAN operand
  TERMINAL command 1-296
TRANSMIT command 1-362
  data encryption function 1-369
  logging function 1-370
TRC operand
  OUTDES command 1-220
  PRINTDS command 1-244

TRIPLE operand
PRINTDS command 1-237
TRTCH operand 1-42, 1-74
ALLOCATE command 1-42, 1-74
ATTRIB command 1-42, 1-74
TRUNCATE operand
PRINTDS command 1-240
TSO/E command (VM/PC user) 1-209
TSO/E command, definition 1-11
TSO/E Enhanced Connectivity Facility 1-209
TSO/E Interactive Data Transmission
RECEIVE command 1-260
TRANSMIT command 1-362
TSOEXEC command 1-377
TSOLIB command 1-379
ACTIVATE operand 1-379, 1-381, 1-382
COND operand 1-381, 1-383
DATASET operand 1-382
DDNAME operand 1-382
DEACTIVATE operand 1-379, 1-381, 1-382
DISPLAY operand 1-379, 1-381, 1-383
DSNAME operand 1-382
FILE operand 1-382
LIBRARY operand 1-382
QUIET operand 1-383
RESET operand 1-379, 1-381, 1-383
UNCOND operand 1-381, 1-383

U

UCOUNT operand
ALLOCATE command 1-33
UCS operand
ALLOCATE command 1-46
OUTDES command 1-220
PRINTDS command 1-244
UNALLOC command under TEST 1-359
unauthorized command, running in unauthorized environment 1-377
UNCATALOG operand
ALLOCATE command 1-37
FREE command 1-164
UNCOND operand
ALTLIB command 1-64
TSOLIB command 1-381, 1-383
UNIT operand
ALLOCATE command 1-32
RECEIVE command 1-263
universal character set name 1-46, 1-220, 1-244
UNLOCK command 2-33, 2-37
UNNUM operand
SAVE subcommand of EDIT 1-132
UNNUM subcommand of EDIT 1-140
UP subcommand of EDIT 1-140
UPDATE operand
CHANGE.WINDOW command 2-5, 2-17
UPDATE operand *(continued)*
DEFINE.WINDOW command 2-21
user data value 1-220
USER operand
ALTLIB command 1-63
EDIT—SUBMIT subcommand 1-136
SEND command 1-278
SUBMIT command 1-291
USERCATALOG operand
LISTCAT command 1-192
USERDATA operand
OUTDES command 1-220
USERID operand
RECEIVE command 1-261
using HELP 1-15
USING operand
ALLOCATE command 1-35

V

VERIFY operand
ALLOCATE command 1-45
VERIFY subcommand of EDIT 1-141
VIEW operand
CHANGE.WINDOW command 2-5, 2-18
DEFINE.WINDOW command 2-21
VLFNOTE command 1-388
VOLUME operand
ALLOCATE command 1-27
LISTCAT command 1-193
RECEIVE command 1-263
VSAM data sets
TSO/E commands and subcommands 1-16
VSBASIC
EDIT command 1-89
RUN command 1-274
VSEQ operand
ALLOCATE command 1-34

W

WAIT operand
SEND command 1-279
WHEN command 1-391
WHERE subcommand of TEST 1-359
width operand
DEFINE.WINDOW command 2-19
WINDOW operand
RESTORE command 2-31
SAVE operand 2-33
window_name operand
CHANGE.CURSOR command 2-7
CHANGE.TERMINAL command 2-15
CHANGE.WINDOW command 2-16
DEFINE.WINDOW command 2-19
DELETE.WINDOW command 2-22

window_name operand *(continued)*
FIND command 2-24
RESTORE command 2-32
SAVE command 2-33
SCROLL command 2-35
UNLOCK command 2-37
windows
default 2-4
deleting 2-22
information displayed 2-28
information restored 2-31
information saved 2-33
WINDOWS operand
QUERY command 2-28
WKSPACE operand
LINK command 1-179
LOADGO command 1-201
writer name 1-46
WRITER operand
ALLOCATE command 1-46
OUTDES command 1-220
PRINTDS command 1-244

X

XCAL operand
LINK command 1-178
XREF operand
LINK command 1-178

Communicating Your Comments to IBM

OS/390
TSO/E
Command Reference

Publication No. SC28-1969-03

If you especially like or dislike anything about this book, please use one of the methods listed below to send your comments to IBM. Whichever method you choose, make sure you send your name, address, and telephone number if you would like a reply.

Feel free to comment on specific errors or omissions, accuracy, organization, subject matter, or completeness of this book. However, the comments you send should pertain to only the information in this manual and the way in which the information is presented. To request additional publications, or to ask questions or make comments about the functions of IBM products or systems, you should talk to your IBM representative or to your IBM authorized remarketer.

When you send comments to IBM, you grant IBM a nonexclusive right to use or distribute your comments in any way it believes appropriate without incurring any obligation to you.

If you are mailing a readers' comment form (RCF) from a country other than the United States, you can give the RCF to the local IBM branch office or IBM representative for postage-paid mailing.

- If you prefer to send comments by mail, use the RCF at the back of this book.
- If you prefer to send comments by FAX, use this number:
  - FAX (United States and Canada): 1+914+432-9405
  - FAX (Other countries): Your International Access Code+1+914+432-9405
- If you prefer to send comments electronically, use this network ID:
  - IBMLink (United States customers only): IBMUSM10(MHVRCFS)
  - IBM Mail Exchange: USIB6TC9 at IBMMAIL
  - Internet e-mail: mhvrcfs@us.ibm.com
  - World Wide Web: http://www.ibm.com/s390/os390/

Make sure to include the following in your note:

- Title and publication number of this book
- Page number or topic to which your comment applies.

Readers' Comments — We'd Like to Hear from You

OS/390
TSO/E
Command Reference

Publication No. SC28-1969-03

Overall, how satisfied are you with the information in this book?

	Very Satisfied	Satisfied	Neutral	Dissatisfied	Very Dissatisfied
Overall satisfaction	☐	☐	☐	☐	☐

How satisfied are you that the information in this book is:

	Very Satisfied	Satisfied	Neutral	Dissatisfied	Very Dissatisfied
Accurate	☐	☐	☐	☐	☐
Complete	☐	☐	☐	☐	☐
Easy to find	☐	☐	☐	☐	☐
Easy to understand	☐	☐	☐	☐	☐
Well organized	☐	☐	☐	☐	☐
Applicable to your tasks	☐	☐	☐	☐	☐

Please tell us how we can improve this book:

Thank you for your responses. May we contact you? ☐ Yes ☐ No

When you send comments to IBM, you grant IBM a nonexclusive right to use or distribute your comments in any way it believes appropriate without incurring any obligation to you.

Name _____ Address _____

Company or Organization _____

Phone No. _____

Readers' Comments — We'd Like to Hear from You
SC28-1969-03

Cut or Fold
Along Line

Fold and Tape | **Please do not staple** | Fold and Tape

NO POSTAGE
NECESSARY
IF MAILED IN THE
UNITED STATES

BUSINESS REPLY MAIL

FIRST-CLASS MAIL PERMIT NO. 40 ARMONK, NEW YORK

POSTAGE WILL BE PAID BY ADDRESSEE

IBM Corporation
Department 55JA, Mail Station P384
522 South Road
Poughkeepsie, NY 12601-5400

Fold and Tape | **Please do not staple** | Fold and Tape

SC28-1969-03

Cut or Fold
Along Line

Program Number: 5647-A01

Printed in the United States of America
on recycled paper containing 10%
recovered post-consumer fiber.

SC28-1969-03